RETURN TO AGENDA

CITY OF FAIRVIEW HEIGHTS
CITY COUNCIL MEETING AGENDA
CITY COUNCIL CHAMBERS
APRIL 19, 2016
7:00 P.M.

A. Call to Order

B. Pledge of Allegiance

C. Invocation

D. Roll Call

E. Public Participation

F. Consent Agenda:

City Council Minutes - April 5, 2016
Public Hearing Minutes - April 5, 2016
Finance Report
Presentation of bills - $1,516,185.14

G. Committee Reports

H. Communication from Mayor

I. Communication from Elected Officials

J. UNFINISHED BUSINESS

Proposed Resolution No. 29-'16, a Resolution repealing Resolution No. 3908-2015, passed April 7, 2015, and approved April 9, 2015, and all preceding Resolutions passed and approved since April 9, 2015; and a Resolution authorizing Departmental Force Levels effective May 1, 2016. (Operations Committee)

Proposed Resolution No. 31-'16, a Resolution authorizing the spending of Hotel/Motel Funds from the Hotel/Motel Tax Grant Funding Program for the promotion of tourism within the City of Fairview Heights based on the amount approved in the 2016-2017 City Budget as approved by Council. (Administration Committee)

Proposed Ordinance No. 13-'16, an Ordinance establishing a Budget for the City of Fairview Heights for the Fiscal Year 2016-2017. (Administration Committee)

Proposed Ordinance No. 15-'16, an Ordinance amending Ordinance No. 190, "The Revised Code," Chapter 14, "The Development Code," Section 14-2-3, "Zone District Map and Boundaries" by changing the Zone District of certain real property commonly known as 9109 St. Clair Avenue and 1407 Second Street, from "R5" Single Family Dwelling District to "PB" Planned Business District. (Community Committee)

RETURN TO AGENDA

J. UNFINISHED BUSINESS - continued

Proposed Ordinance No. 16-'16, an Ordinance approving a Development Plan for an impound/storage lot, within the Planned Business District, located at 9109 St. Clair Avenue and 1407 Second Avenue. (Community Committee)

Proposed Ordinance No. 18-'16, an Ordinance fixing a time and place for a Public Hearing concerning the Ludwig Drive Redevelopment Project Area Redevelopment Plan. (Community Committee)

Proposed Ordinance No. 19-'16, an Ordinance creating a Joint Review Board for the Ludwig Drive Redevelopment Project Area and setting initial meeting time and place. (Community Committee)

Proposed Ordinance No. 20-'16, an Ordinance authorizing the establishment of the Proposed Tax Increment Financing District "Interested Parties" Registries and adopting Registration Rules for such registry for Ludwig Drive TIF. (Community Committee)

Proposed Ordinance No. 21-'16, an Ordinance establishing a Special Tax Allocation Fund for the area subject to Proposed Resolution No. 25-'16. (Community Committee)

Proposed Ordinance No. 22-'16, an Ordinance authorizing the establishment of the Proposed Tax Increment Financing District "Interested Parties" Registries and adopting Registration Rules for such registry for State Route 159 North TIF. (Community Committee)

Proposed Ordinance No. 23-'16, an Ordinance fixing a time and place for a Public Hearing concerning the State Route 159 North Redevelopment Project Area Redevelopment Plan. (Community Committee)

Proposed Ordinance No. 24-'16, an Ordinance creating a Joint Review Board for the State Route 159 North Redevelopment Project Area and setting initial meeting time and place. (Community Committee)

Proposed Ordinance No. 25-'16, an Ordinance establishing a Special Tax Allocation Fund for the area subject to Proposed Resolution No. 26-'16. (Community Committee)

Proposed Ordinance No. 26-'16, an Ordinance authorizing the City to enter into a Redevelopment Agreement with Jim McKay at 10408 Lincoln Trail, Fairview Heights, IL. (Community Committee)

K. NEW BUSINESS

Proposed Ordinance No. 27-'16, an Ordinance authorizing the sale of municipally owned real property commonly known as 10408 Lincoln Trail, Fairview Heights, Illinois. (Administration Committee)

Proposed Ordinance No. 28-'16, an Ordinance authorizing the City to enter into a revised Redevelopment Agreement with Steve Giger at 10610 Lincoln Trail, Fairview Heights, IL. (Administration Committee)

Proposed Resolution No. 32-'16, a Resolution authorizing the Mayor to enter into an agreement with the City of O'Fallon for the provision of 911 Certified Dispatch Staffing on an as needed basis. (Administration Committee)

RETURN TO AGENDA

K. NEW BUSINESS – continued

Proposed Resolution No. 33-'16, a Resolution amending Resolution No. 3992-2016, passed February 16, 2016 and approved February 18, 2016; a Resolution authorizing the Mayor to enter into an agreement with Motorola Solutions, Inc. for the purchase of Dispatch Radio Consoles for use by the Fairview Heights Police Department. (Administration Committee)

Proposed Resolution No. 34-'16, a Resolution authorizing the City to allocate $16,500.00 to the Metro East Chamber of Commerce for Phase II of the Fairview Heights Audience Extension Retargeting Campaign. (Administration Committee)

Proposed Resolution No. 35-'16, a Resolution authorizing the Mayor to enter into a contract on behalf of the City of Fairview Heights with Rooters Asphalt for Asphalt Resurfacing of roadways located in Weinel Hills. (Operations Committee)

Proposed Resolution No. 36-'16, a Resolution authorizing the Mayor to enter into a contract on behalf of the City of Fairview Heights with Haier Plumbing & Heating, Inc. for storm water improvements in the Fox Creek Subdivision. (Operations Committee)

Proposed Resolution No. 37-'16, a Resolution authorizing the Mayor to enter into a Right-of-Way Agreement for the installation of Telecommunications Equipment within, over or under the City's Right-of-Way and a Dark Fiber License Agreement for the reservation of two dark fiber strands in the fiber optic cable for use by the City with Extenet Systems, Inc. (Operations Committee)

L. ADJOURNMENT

RETURN TO AGENDA

CITY OF FAIRVIEW HEIGHTS
CITY COUNCIL MINUTES
APRIL 5, 2016

The regular meeting of the Fairview Heights City Council was called to order at 7:00 P.M. by Mayor Mark T. Kupsky in the Municipal Complex, 10025 Bunkum Road, Fairview Heights, IL with the Invocation by City Clerk Karen J. Kaufhold and the Pledge of Allegiance by Mayor Kupsky.

ROLL CALL

Roll call of Aldermen present: Justin Gough, Denise Williams, Bill Poletti, Dennis Baricevic, Pat Baeske, Brenda Wagner, Harry Zimmerman, and Pat Peck. Aldermen Roger Lowry and Frank Menn were absent. Mayor Mark T. Kupsky, City Clerk Karen J. Kaufhold and City Attorney Kevin Hoerner were also present.

PUBLIC PARTICIPATION

Wendy Fuchs – urged City Council to advance Proposed Ordinance No. 14-'16 to the second reading.

CONSENT AGENDA

Alderman Wagner moved to approve the March 15, 2016 City Council minutes. Seconded by Alderman Poletti.
Roll call on the Consent Agenda showed Aldermen Gough, Williams, Poletti, Baricevic, Baeske, Wagner, Zimmerman, and Peck voting "Yea." Aldermen Lowry and Menn were absent. Consent Agenda passed on 8 yeas and 2 absent.

COMMITTEE REPORTS

Alderman Baricevic moved to allow Mike Malloy to read the appraised value of the property located at 10408 Lincoln Trail. Seconded by Alderman Wagner. Motion carried.

Alderman Baricevic opened one bid on property located at 10408 Lincoln Trail:

James V. McKay – 414 North Old Route 66, Litchfield, IL 62056 - $50,501.50.

Alderman Baricevic moved to forward the bid to the Finance Committee for review. Seconded by Alderman Wagner. Motion carried.

COMMUNICATION FROM MAYOR

Mayor Kupsky stated that students from Pontiac Jr. High were in the audience and toured City Departments today; Mayor announced that there will be a Community Prayer Breakfast on April 12th, 7:30 A.M. at Holy Trinity Church; Mayor stated that the Hero Inside Day will be held on April 16th at Moody Park, 12:00 P.M. to 10:00 P.M.;

RETURN TO AGENDA

COMMUNICATION FROM MAYOR - continued

Mayor also announced Community Cleanup day will be held on April 23rd at Moody Park from 9:00 A.M. to 3:00 P.M.

COMMUNICATION FROM ELECTED OFFICIALS

Alderman Wagner stated that the Volunteer Dinner was very nice.

UNFINISHED BUSINESS

None.

NEW BUSINESS

Proposed Ordinance No. 13-'16, an Ordinance establishing a Budget for the City of Fairview Heights for the Fiscal Year 2016-2017. Motion made by Alderman Poletti. Seconded by Alderman Williams. Proposed Ordinance No. 13-'16 was read for the first time.

Proposed Ordinance No. 14-'16, an Ordinance approving a Development Plan for a Private School, within the Planned Business District, located at 5601 Old Collinsville Road. Motion made by Alderman Williams. Seconded by Alderman Baeske. Proposed Ordinance No. 14-'16 was read for the first time.
Alderman Gough moved to advance Proposed Ordinance No. 14-'16 to the second reading. Seconded by Alderman Baeske.
Roll call on the motion to advance Proposed Ordinance No. 14-'16 to the second reading showed Aldermen Gough, Williams, Poletti, Baricevic, Baeske, Wagner, Zimmerman and Peck voting "Yea." Aldermen Lowry and Menn were absent. Motion passed on 8 yeas and 2 absent. Proposed Ordinance No. 14-'16 was read for the second time.
Roll call on Proposed Ordinance No. 14-'16 showed Aldermen Gough, Williams, Poletti, Baricevic, Baeske, Wagner, Zimmerman and Peck voting "Yea." Aldermen Lowry and Menn were absent. Proposed Ordinance No. 14-'16 passed on 8 yeas and 2 absent. Proposed Ordinance No. 14-'16 now becomes **ORDINANCE NO. 1729-2016**.

Proposed Ordinance No. 15-'16, an Ordinance amending Ordinance No. 190, "The Revised Code," Chapter 14, "The Development Code," Section 14-2-3, "Zone District Map and Boundaries" by changing the Zone District of certain real property commonly known as 9109 St. Clair Avenue and 1407 Second Street, from "R5" Single Family Dwelling District to "PB" Planned Business District. Motion made by Alderman Poletti. Seconded by Alderman Zimmerman. Proposed Ordinance No. 15-'16 was read for the first time.

Proposed Ordinance No. 16-'16, an Ordinance approving a Development Plan for an impound/storage lot, within the Planned Business District, located at 9109 St. Clair Avenue and 1407 Second Avenue. Motion made by Alderman Baricevic. Seconded by Alderman Zimmerman. Proposed Ordinance No. 16-'16 was read for the first time.

RETURN TO AGENDA

NEW BUSINESS – Proposed Ordinance No. 17-'16 - continued

Proposed Ordinance No. 17-'16, an Ordinance approving a Development Plan for expansion of structure for Auto Spa, located within the Planned Business District, located at 10518 Lincoln Trail. Motion made by Alderman Poletti. Seconded by Alderman Baeske. Proposed Ordinance No. 17-'16 was read for the first time.
Alderman Wagner moved to advance Proposed Ordinance No. 17-'16 to the second reading. Seconded by Alderman Baeske.
Roll call on the motion to advance Proposed Ordinance No. 17-'16 to the second reading showed Aldermen Gough, Poletti, Baricevic, Baeske, Wagner and Zimmerman voting "Yea." Aldermen Williams and Peck voting "Nay." Aldermen Lowry and Menn were absent. Motion passed on 6 yeas, 2 nays and 2 absent. Proposed Ordinance No. 17-'16 was read for the second time.
Roll call on Proposed Ordinance No. 17-'16 showed Aldermen Gough, Williams, Poletti, Baricevic, Baeske, Wagner, Zimmerman and Peck voting "Yea." Aldermen Lowry and Menn were absent. Proposed Ordinance No. 17-'16 passed on 8 yeas and 2 absent.
Proposed Ordinance No. 17-'16 now becomes **ORDINANCE NO. 1730-2016**.

Alderman Poletti moved to amend the agenda by inserting the third and fourth motions to be voted on after Proposed Ordinance No. 17-'16. Seconded by Alderman Baricevic.
Roll call on the motion showed Aldermen Gough, Williams, Poletti, Baricevic, Baeske, Wagner, Zimmerman and Peck voting "Yea." Aldermen Lowry and Menn were absent. Motion passed on 8 yeas and 2 absent.

Alderman Wagner moved to accept the Ludwig Drive TIF Redevelopment Plan and approve sending to all Taxing Districts and DCEO. Seconded by Alderman Baeske.
Roll call on the motion showed Aldermen Gough, Williams, Poletti, Baeske, Wagner, Zimmerman and Peck voting "Yea." Alderman Baricevic voting "Nay." Aldermen Lowry and Menn were absent. Motion passed on 7 yeas, 1 nay and 2 absent.

Alderman Wagner moved to accept the State Route 159 TIF Redevelopment Plan and approve sending to all Taxing Districts and DCEO. Seconded by Aldermen Baeske.
Roll call on the motion showed Aldermen Gough, Williams, Poletti, Baricevic, Baeske, Wagner, Zimmerman and Peck voting "Yea." Aldermen Lowry and Menn were absent. Motion passed on 8 yeas and 2 absent.

Proposed Ordinance No. 18-'16, an Ordinance fixing a time and place for a Public Hearing concerning the Ludwig Drive Redevelopment Project Area Redevelopment Plan. Motion made by Alderman Poletti. Seconded by Alderman Wagner. Proposed Ordinance No. 18-'16 was read for the first time.

Proposed Ordinance No. 19-'16, an Ordinance creating a Joint Review Board for the Ludwig Drive Redevelopment Project Area and setting initial meeting time and place. Motion made by Alderman Peck. Seconded by Alderman Baeske. Proposed Ordinance No. 19-'16 was read for the first time.

RETURN TO AGENDA

NEW BUSINESS - continued

Proposed Ordinance No. 20-'16, an Ordinance authorizing the establishment of the Proposed Tax Increment Financing District "Interested Parties" Registries and adopting Registration Rules for such registry for Ludwig Drive TIF. Motion made by Alderman Poletti. Seconded by Alderman Wagner. Proposed Ordinance No. 20-'16 was read for the first time.

Proposed Ordinance No. 21-'16, an Ordinance establishing a Special Tax Allocation Fund for the area subject to Proposed Resolution No. 25-'16. Motion made by Alderman Baeske. Seconded by Alderman Wagner. Proposed Ordinance No. 21-'16 was read for the first time.

Proposed Ordinance No. 22-'16, an Ordinance authorizing the establishment of the Proposed Tax Increment Financing District "Interested Parties" Registries and adopting Registration Rules for such registry for State Route 159 North TIF. Motion made by Alderman Baeske. Seconded by Alderman Wagner. Proposed Ordinance No. 22-'16 was read for the first time.

Proposed Ordinance No. 23-'16, an Ordinance fixing a time and place for a Public Hearing concerning the State Route 159 North Redevelopment Project Area Redevelopment Plan. Motion made by Alderman Peck. Seconded by Alderman Baeske. Proposed Ordinance No. 23-'16 was read for the first time.

Proposed Ordinance No. 24-'16, an Ordinance creating a Joint Review Board for the State Route 159 North Redevelopment Project Area and setting initial meeting time and place. Motion made by Alderman Baeske. Seconded by Alderman Poletti. Proposed Ordinance No. 24-'16 was read for the first time.

Proposed Ordinance No. 25-'16, an Ordinance establishing a Special Tax Allocation Fund for the area subject to Proposed Resolution No. 26-'16. Motion made by Alderman Baeske. Seconded by Alderman Wagner. Proposed Ordinance No. 25-'16 was read for the first time.

Proposed Ordinance No. 26-'16, an Ordinance authorizing the City to enter into a Redevelopment Agreement with Jim McKay at 10408 Lincoln Trail, Fairview Heights, IL. Motion made by Alderman Wagner. Seconded by Alderman Baeske. Proposed Ordinance No. 26-'16 was read for the first time.

Proposed Resolution No. 25-'16, a Resolution authorizing the recovery of City monies expended to create the Ludwig Drive TIF from the initial proceeds of the TIF. Motion made by Alderman Zimmerman. Seconded by Alderman Gough.
Roll call on Proposed Resolution No. 25-'16 showed Aldermen Gough, Williams, Poletti, Baricevic, Baeske, Wagner, Zimmerman and Peck voting "Yea." Aldermen Lowry and Menn were absent. Proposed Resolution No. 25-'16 passed on 8 yeas and 2 absent.
Proposed Resolution No. 25-'16 now becomes **RESOLUTION NO. 4001-2016**.

RETURN TO AGENDA

NEW BUSINESS - continued

Proposed Resolution No. 26-'16, a Resolution authorizing the recovery of City monies expended to create the State Route 159 North TIF from the initial proceeds of the TIF. Motion made by Alderman Poletti. Seconded by Alderman Zimmerman.
Roll call on Proposed Resolution No. 26-'16 showed Aldermen Gough, Williams, Poletti, Baricevic, Baeske, Wagner, Zimmerman and Peck voting "Yea." Aldermen Lowry and Menn were absent. Proposed Resolution No. 26-'16 passed on 8 yeas and 2 absent.
Proposed Resolution No. 26-'16 now becomes **RESOLUTION NO. 4002-2016**.

Proposed Resolution No. 27-'16, a Resolution authorizing the City to charge an Enterprise Zone Application Fee in the amount of Five Hundred Dollars ($500.00). Motion made by Alderman Baeske. Seconded by Alderman Poletti.
Roll call on Proposed Resolution No. 27-'16 showed Aldermen Gough, Williams, Poletti, Baricevic, Baeske, Wagner, Zimmerman and Peck voting "Yea." Aldermen Lowry and Menn were absent. Proposed Resolution No. 27-'16 passed on 8 yeas and 2 absent.
Proposed Resolution No. 27-'16 now becomes **RESOLUTION NO. 4003-2016**.

Proposed Resolution No. 28-'16, a Resolution approving a Special Event Permit request allowing the placement of a Medical Examination Center for conducting of a National Health and Nutrition Examination Survey located at 134 St. Clair Square, North Illinois. Motion made by Alderman Poletti. Seconded by Alderman Zimmerman.
Roll call on Proposed Resolution No. 28-'16 showed Aldermen Gough, Williams, Poletti, Baricevic, Baeske, Wagner, Zimmerman and Peck voting "Yea." Aldermen Lowry and Menn were absent. Proposed Resolution No. 28-'16 passed on 8 yeas and 2 absent.
Proposed Resolution No. 28-'16 now becomes **RESOLUTION NO. 4004-2016**.

Proposed Resolution No. 29-'16, a Resolution repealing Resolution No. 3908-2015, passed April 7, 2015, and approved April 9, 2015, and all preceding Resolutions passed and approved since April 9, 2015 and; a Resolution authorizing Departmental Force Levels effective May 1, 2016.
Alderman Baricevic moved to table Proposed Resolution No. 29-'16 to the April 19, 2016 City Council meeting. Seconded by Alderman Baeske.
Roll call on the motion showed Aldermen Gough, Williams, Poletti, Baricevic, Baeske, Wagner, Zimmerman and Peck voting "Yea." Aldermen Lowry and Menn were absent. Motion passed on 8 yeas and 2 absent.

Proposed Resolution No. 30-'16, a Resolution authorizing the Mayor to enter into an agreement for provisions of group medical, dental, vision and life insurance coverage for employees of the City of Fairview Heights and to be represented by the MCS Companies-Midwest, Inc. for the coverage period of April 1, 2016 through March 31, 2017. Motion made by Alderman Baeske. Seconded by Alderman Zimmerman.
Roll call on Proposed Resolution No. 30-'16 showed Aldermen Gough, Williams, Poletti, Baricevic, Baeske, Wagner, Zimmerman and Peck voting "Yea." Aldermen Lowry and Menn were absent. Proposed Resolution No. 30-'16 passed on 8 yeas and 2 absent.
Proposed Resolution No. 30-'16 now becomes **RESOLUTION NO. 4005-2016**.

RETURN TO AGENDA

NEW BUSINESS - continued

Alderman Baeske moved to authorize the Interested Parties Registration Notice for the Ludwig Drive TIF to be published in a newspaper of general circulation in the City. Seconded by Alderman Williams. Motion carried.

Alderman Baeske moved to authorize the Interested Parties Registration Notice for the State Route 159 North TIF to be published in a newspaper of general circulation in the City. Seconded by Alderman Poletti. Motion carried.

Alderman Peck moved to nominate Charles Kassly as a public member of the JRB for the Ludwig Drive TIF Redevelopment Plan. Seconded by Alderman Poletti. Motion carried.

Alderman Zimmerman moved to nominate Charles Kassly as a public member of the JRB for the State Route 159 North TIF Redevelopment Plan. Seconded by Alderman Williams. Motion carried.

Alderman Gough moved to adjourn. Seconded by Alderman Baeske. Motion carried.

Meeting adjourned at 7:40 P.M.

Respectfully submitted,

Karen J. Kaufhold

KAREN J. KAUFHOLD
CITY CLERK

RETURN TO AGENDA

CITY OF FAIRVIEW HEIGHTS
PUBLIC HEARING MINUTES
APRIL 5, 2016

The Public Hearing was called to order at 6:45 P.M. by Mayor Mark Kupsky in the Municipal Complex, 10025 Bunkum Road, Fairview Heights, IL.

ROLL CALL

Roll call of Aldermen present: Denise Williams, Bill Poletti, Dennis Baricevic, Pat Baeske, Brenda Wagner, Harry Zimmerman and Pat Peck. Mayor Mark Kupsky and City Clerk Karen J. Kaufhold were also present.

PUBLIC HEARING ANNOUNCEMENT

Mayor Kupsky announced the Public Hearing is regarding the City of Fairview Heights 2016-2017 Proposed Budget estimated at $32,099,123.00.

SPEAKING IN FAVOR OF THE ABOVE ANNOUNCEMENT

No one speaking in favor of the above announcement.

SPEAKING IN OPPOSITION OF THE ABOVE ANNOUNCEMENT

No one speaking in opposition of the above announcement.

WRITTEN COMMENTS IN FAVOR OF THE ABOVE ANNOUNCEMENT

No written comments in favor of the above announcement.

WRITTEN COMMENTS IN OPPOSITION OF THE ABOVE ANNOUNCEMENT

No written comments in opposition of the above announcement.

Alderman Poletti moved to adjourn. Seconded by Alderman Baeske. Motion carried.

The Public Hearing adjourned at 6:49 P.M.

Respectfully submitted,

Karen J. Kaufhold

Karen J. Kaufhold
City Clerk

RETURN TO AGENDA

Memo

To: Mayor & City Council

From: Gina Rader - Director of Finance

CC: City Clerk & Directors

Date: April 14, 2016

Re: Finance Report – April 19, 2016 City Council Meeting

Presentation of Bills

Bills in the amount of $1,516,185.14 were approved for payment at the Finance Committee meeting on April 13, 2016.

Finance Committee Legislation

- Revision to Perfect Finish Redevelopment Agreement (Reducing annual sales from $892,000 to $792,000)
- Metro East Regional Chamber of Commerce – Fairview Heights Audience Extension Retargeting Campaign $16,500
- 2016 Hotel/Motel Funding Recommendations

Please let me know if you have any questions.

RETURN TO AGENDA

PROPOSED RESOLUTION NO. 29-'16

A RESOLUTION REPEALING RESOLUTION NO. 3908-2015, PASSED APRIL 7, 2015, AND APPROVED APRIL 9, 2015, AND ALL PRECEDING RESOLUTIONS PASSED AND APPROVED SINCE APRIL 9, 2015 AND; A RESOLUTION AUTHORIZING DEPARTMENTAL FORCE LEVELS EFFECTIVE MAY 1, 2016.

WHEREAS, the City is in need of a stable work force.

WHEREAS, the Mayor is hereby authorized to hire personnel on an emergency basis, emergency defined as needed to continue vital services as needed to protect safety and health of citizens, for a period not to exceed twenty two (22) working days per individual within any consecutive three (3) month period without the authorization of the City Council. The Mayor shall provide a courtesy notification of the emergency requirements to all Aldermen within five (5) days after hiring emergency employees.

WHEREAS, the Finance Department shall not issue or approve pay vouchers for persons unless the position has been authorized by the Mayor and the City Council.

WHEREAS, the following number of employees, by job title, has been deemed necessary to operate the City in a safe, efficient and businesslike manner:

EXECUTIVE:

PART TIME:

Liquor Commissioner	One (1)
City Collector	One (1)
Budget Director	One (1)
City Attorney	One (1)

ADMINISTRATION:

FULL TIME:

Secretary	Grade 6	One (1)
Information Systems Specialist		One (1)
IT Analyst	Grade 5	One (1)
Human Resource Coordinator	Grade 8	One (1)

RETURN TO AGENDA

PART TIME:

Administrative Support (Clerk III) (not to exceed 1,456 hours/year)	One (1)

EDC:

Director	One (1)

EXECUTIVE – CITY CLERK'S OFFICE: **(Under the direction of the City Clerk)**

FULL TIME:

Supervisor/Deputy Clerk - Management Level IV	One (1)
Office Staff I	One (1)
Office Staff II	One (1)

EXECUTIVE – FINANCE DEPARTMENT:

FULL TIME:

Finance Director/Budget Officer		One (1)
Accounting Supervisor	Grade 7	One (1)
Office Staff II		One (1)

LAND USE AND DEVELOPMENT:

FULL TIME:

Director		One (1)
Secretary		One (1)
Building Official	Grade 7	One (1)
Code Enforcement Officer		One (1)
Assistant Building Official		One (1)
Animal Control /Code Enforcement Assistant		One (1)
Office Staff II		One (1)

PART TIME:

Electrical Inspector (Appointed)	One (1)
Plumbing Inspector (Appointed)	One (1)
Property Maintenance Inspector (Not to exceed 1,456 hours/year)	Two (2)
Animal Control Callout Relief (Not to exceed 120 hours/year)	One (1)
Code Enforcement Assistant (Not to exceed 1,456 hours/year)	One (1)

RETURN TO AGENDA

LIBRARY:

FULL TIME:

Director	One (1)
Youth Services/Assistant Director	One (1)
Head of Circulation Services	One (1)

PART TIME:

Circulation Clerk (26 hours/week)	Six (6)
Youth Services Assistant (25 hours/week)	One (1)
Pager/Shelver (14 hours/week)	One (1)
Summer Library Aide (10 hours/week for 12 weeks)	One (1)
Pager/Shelver (10 hours/week for 10 weeks)	One (1)

LAW ENFORCEMENT:

FULL TIME COMMISSIONED:

	Chief - Management Level I	One (1)
*	Captain - Management Level II	One (1)
*	Lieutenant - Management Level III	Three (3)
*	Sergeants - Management Level IV	Five (5)
	Patrol Officer -	Thirty-Four (34)

One (1) Drug Enforcement Agency
Two (2) School Resource Officer
One (1) Drug Tactical unit
One (1) Metropolitan Enforcement Group of Southwestern Illinois
Two (2) COPS Grant (to expire 4-30-15)

*Police Management Levels as outlined in Salary Ordinance

FULL TIME CIVILIAN:

Supervisor of Support Services	Grade 8	One (1)
Telecommunicator	Grade 6	Four (4)
Administrative Secretary	Grade 6	One (1)
Records Clerk	Grade 3	One (1)
Community Service Officer	Grade 4	Two (2)
Civilian Supervisor	Grade 7	One (1)

RETURN TO AGENDA

PART TIME:

Crime Free Multi-Housing Coordinator (not to exceed 28 hours per week, average)	One (1)

TELECOMMUNICATOR – PART-TIME BANK
(Total Part Time Hours 6,448 per year)

Telecommunicators (not to exceed 28 hours per week, average)	Four (4)
Any other Telecommunicators (not to exceed 20 hours per week, average)	

CIVILIAN POLICE AIDE – PART-TIME BANK
(Total Part Time Hours 11,208 per year)

Civilian Police Aides (not to exceed 28 hours per week, average)	Four (4)
Any other Civilian Police Aides (not to exceed 20 hours per week, average)	

E.S.D.A.:

PART TIME:

E.S.D.A. Coordinator	One (1)
Assistant E.S.D.A. Coordinator	One (1)

PUBLIC WORKS DEPARTMENT ENGINEERING:

FULL TIME:

Director		One (1)
City Engineer		One (1)
Supervisor - Management Level IV		One (1)
Assistant Superintendent	Grade 8	One (1)
Lead Laborer – Public Works		Two (2)
Laborer – Streets		Seven (7)
Secretary	Grade 6	One (1)

PART TIME:

Unskilled Laborers (not to exceed 728 hours/year)	Two (2)
Skilled Laborer (not to exceed 728 hours/year)	Four (4)

MUNICIPAL COMPLEX:

FULL TIME:

Lead Laborer - Municipal Complex	One (1)
Laborer - Municipal Complex	One (1)
Custodian	Two (2)

RETURN TO AGENDA

PART TIME:

Custodian (not to exceed 1,456 hours/year)	One (1)
Custodian (not to exceed 320 hours)	One (1)

MAINTENANCE GARAGE:

FULL TIME:

Superintendent - Management Level IV		One (1)
Master/Lead Mechanic		One (1)
Mechanic		One (1)
Apprentice Mechanic		One (1)

PARKS AND RECREATION:

FULL TIME:

Director		One (1)
Recreation Supervisor	Grade 7	One (1)
Office Staff/Secretary	Grade 6	One (1)
Recreation Staff	Grade 3	One (1)
Laborers – Parks		Six (6)

PART TIME:

Laborers (under 28 hours week/24 weeks)	Five (5)
Seasonal Recreation Staff	Ten (10)
Day Camp Counselor	Three (3)

NOW, THEREFORE, BE IT RESOLVED BY THE CITY COUNCIL OF THE CITY OF FAIRVIEW HEIGHTS, ILLINOIS:

That the Mayor be authorized to employ personnel up to the grade levels as set forth in this Resolution or as indicated in binding contractual agreements, as amended from time to time.

This Resolution shall be in full force and effect from and after its passage and approval as provided by law.

RETURN TO AGENDA

PASSED:

APPROVED:

MARK T. KUPSKY - MAYOR
CITY OF FAIRVIEW HEIGHTS

ATTEST:

KAREN J. KAUFHOLD - CITY CLERK

RETURN TO AGENDA

PROPOSED RESOLUTION NO. 31-'16

A RESOLUTION AUTHORIZING THE SPENDING OF HOTEL/MOTEL FUNDS FROM THE HOTEL/MOTEL TAX GRANT FUNDING PROGRAM FOR THE PROMOTION OF TOURISM WITHIN THE CITY OF FAIRVIEW HEIGHTS BASED ON THE AMOUNT APPROVED IN THE 2016-2017 CITY BUDGET AS APPROVED BY COUNCIL.

WHEREAS, the City of Fairview Heights wishes to promote tourism within the City;

WHEREAS, the Hotel/Motel Screening Committee recommends to City Council the following sponsorships for the Fiscal Year 2016-2017.

NOW, THEREFORE, BE IT RESOLVED BY THE CITY COUNCIL OF THE CITY OF FAIRVIEW HEIGHTS, ILLINOIS:

That the City Council be and is hereby authorizing the Finance Department to include the following sponsorships, utilizing the Hotel/Motel Funds, in the 2016-2017 City Budget, Account #004-102-5-302.00 Public Relations.

Fiscal Year 2016-2017 Budget:

1. Midwest Salute to the Arts	$45,000.00
2. Wingfest	25,000.00
3. YEAH Festival	30,000.00
4. Fairview Heights Homecoming Association	5,000.00

This Resolution shall be in full force and effect from and after its passage and approval as provided by law.

PASSED:

APPROVED:

MARK T. KUPSKY - MAYOR
CITY OF FAIRVIEW HEIGHTS

ATTEST:

KAREN J. KAUFHOLD - CITY CLERK

RETURN TO AGENDA

PROPOSED ORDINANCE NO. 13-'16

AN ORDINANCE ESTABLISHING A BUDGET FOR THE CITY OF FAIRVIEW HEIGHTS FOR THE FISCAL YEAR 2016-2017.

NOW, THEREFORE, BE IT ORDAINED BY THE CITY COUNCIL OF THE CITY OF FAIRVIEW HEIGHTS, ST. CLAIR COUNTY, ILLINOIS:

SECTION 1. ADOPTION. There is hereby adopted for the Fiscal Year 2016-2017 the Budget for the City of Fairview Heights summarized by fund and department within "EXHIBIT A." Further, the delegation of authority to revise the annual budget as stated in Fairview Heights Ordinance No. 190, "The Revised Code," an Ordinance enacting a Code of Ordinances for the City of Fairview Heights, Chapter 3, and Section 3-11-7; and as provided below.

SECTION 2. BUDGETING CONTROLS. The Budget Officer may transfer amounts between expenditure accounts within a departmental budget or expenditure accounts within a fund without departmental segregation without the approval of the City Council. The Mayor's approval is required to transfer amounts between expenditure accounts of different departments within the same fund without City Council approval. The City Council must approve by a majority vote of a quorum of the City Council any transfer of expenditure accounts between funds on the budget ordinance. Contingency monies can be used to cover a shortage in any fund in the budget ordinance with approval by a majority vote of a quorum of the City Council. An amended budget is necessary if the entire expenditures for the fiscal year exceed the budget ordinance total expenses including the contingency fund. By a vote of two-thirds of the members of the corporate authorities then holding office, the annual budget for the municipality

RETURN TO AGENDA

may be revised by deleting, adding to, changing or creating sub-classes within object classes and object classes themselves. No revision of the budget shall be made increasing the budget in the event funds are not available to effectuate the purpose of the revision.

SECTION 3. SUPERSEDER. All Ordinances, Resolutions and Motions, or parts thereof, in conflict with this Ordinance are, to the extent of such conflict, hereby superseded for purposes of this Ordinance.

SECTION 4. PASSAGE. This Ordinance shall be in full force and effect from and after its passage and approval as provided by law.

READ FIRST TIME: April 5, 2016

READ SECOND TIME:

PASSED:

APPROVED:

MARK T. KUPSKY – MAYOR
CITY OF FAIRVIEW HEIGHTS

ATTEST:

KAREN J. KAUFHOLD – CITY CLERK

"EXHIBIT A"

RETURN TO AGENDA

FY 2016-2017 REVENUES			
001 GENERAL FUND		**$**	**17,130,849.00**
001-100-4-310-00	INCOME TAX	$	66,640.00
001-100-4-334-00	FOOD & BEVERAGE TAX	$	63,000.00
001-100-4-335-00	HOTEL-MOTEL TAX	$	17,500.00
001-100-4-340-00	SALES TAX	$	375,000.00
001-100-4-341-00	HOME RULE SALES TAX	$	220,340.00
001-100-4-343-00	USE TAX	$	16,150.00
001-100-4-360-00	CITY SERVICES	$	1,000.00
001-100-4-367-00	USE OF COPY/FAX EQUIPMENT	$	250.00
001-102-4-310-00	INCOME TAX	$	116,620.00
001-102-4-320-00	LIQUOR LICENCES	$	45,000.00
001-102-4-334-00	FOOD & BEVERAGE TAX	$	110,250.00
001-102-4-340-00	SALES TAX	$	412,500.00
001-102-4-341-00	HOME RULE SALES TAX	$	242,374.00
001-102-4-375-00	LICENSES - OTHER THAN LIQ	$	25,000.00
001-104-4-310-00	INCOME TAX	$	66,640.00
001-104-4-315-00	INTEREST INCOME	$	5,500.00
001-104-4-334-00	FOOD & BEVERAGE TAX	$	63,000.00
001-104-4-340-00	SALES TAX	$	150,000.00
001-104-4-341-00	HOME RULE SALES TAX	$	88,136.00
001-110-4-310-00	INCOME TAX	$	183,260.00
001-110-4-334-00	FOOD & BEVERAGE TAX	$	157,500.00
001-110-4-335-00	HOTEL-MOTEL TAX	$	70,000.00
001-110-4-340-00	SALES TAX	$	4,125,000.00
001-110-4-341-00	HOME RULE SALES TAX	$	2,423,736.00
001-110-4-343-00	USE TAX	$	64,600.00
001-110-4-355-00	SPECIAL GRANTS	$	100,000.00
001-110-4-364-00	SCHOOL RESOURCE OFFICER	$	70,000.00
001-110-4-366-00	POLICE REPORTS	$	5,000.00
001-110-4-370-00	POLICE FINES	$	125,000.00
001-110-4-371-00	RESIDENTIAL RENTAL LICENSE FEE	$	100,000.00
001-110-4-372-00	POLICE OUTSIDE EMPLOYMENT	$	85,000.00
001-110-4-373-00	TOWING FEES	$	200,050.00
001-110-4-374-00	SEX OFFENDER REGISTRATION FEE	$	1,000.00
001-110-4-376-00	FUGITIVE FAILURE TO APPREAR FEE	$	15,000.00
001-110-4-377-00	BAIL BOND	$	22,000.00
001-115-4-310-00	INCOME TAX	$	416,500.00
001-115-4-334-00	FOOD & BEVERAGE TAX	$	362,250.00
001-115-4-335-00	HOTEL-MOTEL TAX	$	87,500.00
001-115-4-340-00	SALES TAX	$	937,500.00
001-115-4-341-00	HOME RULE SALES TAX	$	550,849.00
001-115-4-343-00	USE TAX	$	80,750.00
001-120-4-310-00	INCOME TAX	$	249,900.00

RETURN TO AGENDA

001-120-4-334-00	FOOD & BEVERAGE TAX	$	236,250.00
001-120-4-335-00	HOTEL-MOTEL TAX	$	35,000.00
001-120-4-340-00	SALES TAX	$	750,000.00
001-120-4-341-00	HOME RULE SALES TAX	$	440,679.00
001-120-4-343-00	USE TAX	$	32,300.00
001-120-4-345-00	ROAD & BRIDGE ALLOTMENTS	$	38,000.00
001-120-4-350-00	FRANCHISES	$	190,000.00
001-130-4-310-00	INCOME TAX	$	216,580.00
001-130-4-334-00	FOOD & BEVERAGE TAX	$	204,750.00
001-130-4-335-00	HOTEL-MOTEL TAX	$	56,000.00
001-130-4-340-00	SALES TAX	$	150,000.00
001-130-4-341-00	HOME RULE SALES TAX	$	88,136.00
001-130-4-343-00	USE TAX	$	51,680.00
001-140-4-310-00	INCOME TAX	$	99,960.00
001-140-4-334-00	FOOD & BEVERAGE TAX	$	94,500.00
001-140-4-335-00	HOTEL-MOTEL TAX	$	17,500.00
001-140-4-340-00	SALES TAX	$	225,000.00
001-140-4-341-00	HOME RULE SALES TAX	$	132,204.00
001-140-4-343-00	USE TAX	$	16,150.00
001-140-4-393-00	PARK USER FEES	$	15,000.00
001-150-4-310-00	INCOME TAX	$	83,300.00
001-150-4-334-00	FOOD & BEVERAGE TAX	$	126,000.00
001-150-4-335-00	HOTEL-MOTEL TAX	$	28,000.00
001-150-4-340-00	SALES TAX	$	187,500.00
001-150-4-341-00	HOME RULE SALES TAX	$	110,170.00
001-150-4-343-00	USE TAX	$	25,840.00
001-150-4-395-00	RENTS, LEASES, SHARE CORP	$	85,000.00
001-160-4-301-00	BUILDING PERMITS	$	50,000.00
001-160-4-302-00	PLUMBING PERMITS	$	700.00
001-160-4-303-00	ELECTRIC PERMITS	$	3,500.00
001-160-4-305-00	DEMO,SATELLITE & GRADE	$	1,000.00
001-160-4-306-00	SIGN PERMITS	$	9,000.00
001-160-4-308-00	BLDG MAINTENANCE PERMITS	$	45,000.00
001-160-4-310-00	INCOME TAX	$	166,600.00
001-160-4-334-00	FOOD & BEVERAGE TAX	$	157,500.00
001-160-4-335-00	HOTEL-MOTEL TAX	$	17,500.00
001-160-4-340-00	SALES TAX	$	187,500.00
001-160-4-341-00	HOME RULE SALES TAX	$	110,170.00
001-160-4-343-00	USE TAX	$	16,150.00
001-160-4-355-00	SPECIAL GRANTS	$	1,000.00
001-160-4-378-00	VIDEO GAMING TAX	$	70,000.00
001-160-4-390-00	ZONING PERMITS	$	100.00
001-181-4-335-00	HOTEL-MOTEL TAX	$	21,000.00
001-181-4-343-00	USE TAX	$	19,380.00

RETURN TO AGENDA

001-181-4-356-00	E.S.D.A. GRANT	$	4,000.00
002 MOTOR FUEL TAX FUND		**$**	**422,000.00**
002-000-4-315-00	INTEREST INCOME	$	2,000.00
002-000-4-330-00	MOTOR FUEL TAX ALLOTMENT	$	420,000.00
003 FOOD & BEVERAGE TAX FUND		**$**	**503,100.00**
003-000-4-315-00	INTEREST INCOME	$	3,100.00
003-000-4-334-00	FOOD & BEVERAGE TAX	$	500,000.00
004 HOTEL/MOTEL TAX FUND		**$**	**501,800.00**
004-000-4-315-00	INTEREST INCOME	$	1,800.00
004-000-4-335-00	FOOD & BEVERAGE TAX	$	500,000.00
005 HOME RULE TAX FUND		**$**	**3,503,388.00**
005-000-4-315-00	INTEREST INCOME	$	10,000.00
005-000-4-341-00	HOME RULE SALES TAX	$	2,362,888.00
005-000-4-355-00	SPECIAL GRANTS	$	1,130,500.00
006 - CAPITAL RESERVE FUND		**$**	**111,400.00**
006-000-4-315-00	INTEREST INCOME	$	1,400.00
006-102-4-399-00	TRANSFER FROM GENERAL FUND	$	10,000.00
006-110-4-399-00	TRANSFER FROM GENERAL FUND	$	20,000.00
006-115-4-399-00	TRANSFER FROM GENERAL FUND	$	10,000.00
006-120-4-399-00	TRANSFER FROM GENERAL FUND	$	15,000.00
006-130-4-399-00	TRANSFER FROM GENERAL FUND	$	15,000.00
006-140-4-399-00	TRANSFER FROM GENERAL FUND	$	15,000.00
006-150-4-399-00	TRANSFER FROM GENERAL FUND	$	15,000.00
006-160-4-399-00	TRANSFER FROM GENERAL FUND	$	10,000.00
007 - POLICE PENSION FUND		**$**	**1,300,000.00**
007-000-4-399-00	INTER-FUND TRANSFER	$	1,300,000.00
009 - LIBRARY FUND		**$**	**520,859.00**
009-000-4-399-00	INTER-FUND TRANSFER	$	520,859.00
010 - SALES TAX REBATE FUND		**$**	**1,711,200.00**
010-000-4-315-00	INTEREST INCOME	$	1,200.00
010-000-4-340-00	SALES TAX	$	825,000.00
010-000-4-341-00	HOME RULE SALES TAX	$	800,000.00
010-000-4-354-00	BUSINESS DISTRICT SALES TAX	$	85,000.00
011 - TIF #1 - BUNKUM ROAD		**$**	**199,000.00**
011-000-4-315-00	INTEREST INCOME	$	1,000.00
011-000-4-346-00	TIF REVENUE	$	180,000.00
011-000-4-399-00	INTER-FUND TRANSFER	$	18,000.00
012 - TIF #2 - SHOPPES @ ST. CLAIR		**$**	**199,000.00**
012-000-4-315-00	INTEREST INCOME	$	100.00
012-000-4-346-00	TIF REVENUE	$	310,000.00
012-000-4-399-00	INTER-FUND TRANSFER	$	31,000.00
013 - TIF #3 - LINCOLN TRAIL		**$**	**199,000.00**
013-000-4-315-00	INTEREST INCOME	$	3,500.00
013-000-4-346-00	TIF REVENUE	$	220,000.00

RETURN TO AGENDA

013-000-4-399-00	INTER-FUND TRANSFER	$	22,000.00
014 - POLICE YOUTH FUND		**$**	**3,000.00**
014-000-4-328-00	DONATIONS	$	3,000.00
015 - PARKS PROGRAMS FUND		**$**	**63,100.00**
015-000-4-315-00	INTEREST INCOME	$	100.00
015-000-4-362-00	ADVERTISING REVENUE	$	2,000.00
015-000-4-393-00	RECREATION USER FEES	$	55,000.00
015-000-4-395-00	RENTS, LEASES, SHARE CORP	$	6,000.00
030 - OPEB FUND		**$**	**245,100.00**
030-000-4-315-00	INTEREST INCOME	$	100.00
030-000-4-601-00	INSURANCE CONT - EMPLOYEE	$	115,000.00
030-000-4-601-50	INSURANCE CONT - EMPLOYER	$	130,000.00
GRAND TOTAL		**$**	**26,803,441.00**

RETURN TO AGENDA

FY 2016-2017 REVENUES			
001 GENERAL FUND		**$**	**17,130,849.00**
001-100-4-310-00	INCOME TAX	$	66,640.00
001-100-4-334-00	FOOD & BEVERAGE TAX	$	63,000.00
001-100-4-335-00	HOTEL-MOTEL TAX	$	17,500.00
001-100-4-340-00	SALES TAX	$	375,000.00
001-100-4-341-00	HOME RULE SALES TAX	$	220,340.00
001-100-4-343-00	USE TAX	$	16,150.00
001-100-4-360-00	CITY SERVICES	$	1,000.00
001-100-4-367-00	USE OF COPY/FAX EQUIPMENT	$	250.00
001-102-4-310-00	INCOME TAX	$	116,620.00
001-102-4-320-00	LIQUOR LICENCES	$	45,000.00
001-102-4-334-00	FOOD & BEVERAGE TAX	$	110,250.00
001-102-4-340-00	SALES TAX	$	412,500.00
001-102-4-341-00	HOME RULE SALES TAX	$	242,374.00
001-102-4-375-00	LICENSES - OTHER THAN LIQ	$	25,000.00
001-104-4-310-00	INCOME TAX	$	66,640.00
001-104-4-315-00	INTEREST INCOME	$	5,500.00
001-104-4-334-00	FOOD & BEVERAGE TAX	$	63,000.00
001-104-4-340-00	SALES TAX	$	150,000.00
001-104-4-341-00	HOME RULE SALES TAX	$	88,136.00
001-110-4-310-00	INCOME TAX	$	183,260.00
001-110-4-334-00	FOOD & BEVERAGE TAX	$	157,500.00
001-110-4-335-00	HOTEL-MOTEL TAX	$	70,000.00
001-110-4-340-00	SALES TAX	$	4,125,000.00
001-110-4-341-00	HOME RULE SALES TAX	$	2,423,736.00
001-110-4-343-00	USE TAX	$	64,600.00
001-110-4-355-00	SPECIAL GRANTS	$	100,000.00
001-110-4-364-00	SCHOOL RESOURCE OFFICER	$	70,000.00
001-110-4-366-00	POLICE REPORTS	$	5,000.00
001-110-4-370-00	POLICE FINES	$	125,000.00
001-110-4-371-00	RESIDENTIAL RENTAL LICENSE FEE	$	100,000.00
001-110-4-372-00	POLICE OUTSIDE EMPLOYMENT	$	85,000.00
001-110-4-373-00	TOWING FEES	$	200,050.00
001-110-4-374-00	SEX OFFENDER REGISTRATION FEE	$	1,000.00
001-110-4-376-00	FUGITIVE FAILURE TO APPREAR FEE	$	15,000.00
001-110-4-377-00	BAIL BOND	$	22,000.00
001-115-4-310-00	INCOME TAX	$	416,500.00
001-115-4-334-00	FOOD & BEVERAGE TAX	$	362,250.00
001-115-4-335-00	HOTEL-MOTEL TAX	$	87,500.00
001-115-4-340-00	SALES TAX	$	937,500.00
001-115-4-341-00	HOME RULE SALES TAX	$	550,849.00
001-115-4-343-00	USE TAX	$	80,750.00
001-120-4-310-00	INCOME TAX	$	249,900.00

RETURN TO AGENDA

001-120-4-334-00	FOOD & BEVERAGE TAX	$	236,250.00
001-120-4-335-00	HOTEL-MOTEL TAX	$	35,000.00
001-120-4-340-00	SALES TAX	$	750,000.00
001-120-4-341-00	HOME RULE SALES TAX	$	440,679.00
001-120-4-343-00	USE TAX	$	32,300.00
001-120-4-345-00	ROAD & BRIDGE ALLOTMENTS	$	38,000.00
001-120-4-350-00	FRANCHISES	$	190,000.00
001-130-4-310-00	INCOME TAX	$	216,580.00
001-130-4-334-00	FOOD & BEVERAGE TAX	$	204,750.00
001-130-4-335-00	HOTEL-MOTEL TAX	$	56,000.00
001-130-4-340-00	SALES TAX	$	150,000.00
001-130-4-341-00	HOME RULE SALES TAX	$	88,136.00
001-130-4-343-00	USE TAX	$	51,680.00
001-140-4-310-00	INCOME TAX	$	99,960.00
001-140-4-334-00	FOOD & BEVERAGE TAX	$	94,500.00
001-140-4-335-00	HOTEL-MOTEL TAX	$	17,500.00
001-140-4-340-00	SALES TAX	$	225,000.00
001-140-4-341-00	HOME RULE SALES TAX	$	132,204.00
001-140-4-343-00	USE TAX	$	16,150.00
001-140-4-393-00	PARK USER FEES	$	15,000.00
001-150-4-310-00	INCOME TAX	$	83,300.00
001-150-4-334-00	FOOD & BEVERAGE TAX	$	126,000.00
001-150-4-335-00	HOTEL-MOTEL TAX	$	28,000.00
001-150-4-340-00	SALES TAX	$	187,500.00
001-150-4-341-00	HOME RULE SALES TAX	$	110,170.00
001-150-4-343-00	USE TAX	$	25,840.00
001-150-4-395-00	RENTS, LEASES, SHARE CORP	$	85,000.00
001-160-4-301-00	BUILDING PERMITS	$	50,000.00
001-160-4-302-00	PLUMBING PERMITS	$	700.00
001-160-4-303-00	ELECTRIC PERMITS	$	3,500.00
001-160-4-305-00	DEMO,SATELLITE & GRADE	$	1,000.00
001-160-4-306-00	SIGN PERMITS	$	9,000.00
001-160-4-308-00	BLDG MAINTENANCE PERMITS	$	45,000.00
001-160-4-310-00	INCOME TAX	$	166,600.00
001-160-4-334-00	FOOD & BEVERAGE TAX	$	157,500.00
001-160-4-335-00	HOTEL-MOTEL TAX	$	17,500.00
001-160-4-340-00	SALES TAX	$	187,500.00
001-160-4-341-00	HOME RULE SALES TAX	$	110,170.00
001-160-4-343-00	USE TAX	$	16,150.00
001-160-4-355-00	SPECIAL GRANTS	$	1,000.00
001-160-4-378-00	VIDEO GAMING TAX	$	70,000.00
001-160-4-390-00	ZONING PERMITS	$	100.00
001-181-4-335-00	HOTEL-MOTEL TAX	$	21,000.00
001-181-4-343-00	USE TAX	$	19,380.00

RETURN TO AGENDA

001-181-4-356-00	E.S.D.A. GRANT	$	4,000.00
002 MOTOR FUEL TAX FUND		**$**	**422,000.00**
002-000-4-315-00	INTEREST INCOME	$	2,000.00
002-000-4-330-00	MOTOR FUEL TAX ALLOTMENT	$	420,000.00
003 FOOD & BEVERAGE TAX FUND		**$**	**503,100.00**
003-000-4-315-00	INTEREST INCOME	$	3,100.00
003-000-4-334-00	FOOD & BEVERAGE TAX	$	500,000.00
004 HOTEL/MOTEL TAX FUND		**$**	**501,800.00**
004-000-4-315-00	INTEREST INCOME	$	1,800.00
004-000-4-335-00	FOOD & BEVERAGE TAX	$	500,000.00
005 HOME RULE TAX FUND		**$**	**3,503,388.00**
005-000-4-315-00	INTEREST INCOME	$	10,000.00
005-000-4-341-00	HOME RULE SALES TAX	$	2,362,888.00
005-000-4-355-00	SPECIAL GRANTS	$	1,130,500.00
006 - CAPITAL RESERVE FUND		**$**	**111,400.00**
006-000-4-315-00	INTEREST INCOME	$	1,400.00
006-102-4-399-00	TRANSFER FROM GENERAL FUND	$	10,000.00
006-110-4-399-00	TRANSFER FROM GENERAL FUND	$	20,000.00
006-115-4-399-00	TRANSFER FROM GENERAL FUND	$	10,000.00
006-120-4-399-00	TRANSFER FROM GENERAL FUND	$	15,000.00
006-130-4-399-00	TRANSFER FROM GENERAL FUND	$	15,000.00
006-140-4-399-00	TRANSFER FROM GENERAL FUND	$	15,000.00
006-150-4-399-00	TRANSFER FROM GENERAL FUND	$	15,000.00
006-160-4-399-00	TRANSFER FROM GENERAL FUND	$	10,000.00
007 - POLICE PENSION FUND		**$**	**1,300,000.00**
007-000-4-399-00	INTER-FUND TRANSFER	$	1,300,000.00
009 - LIBRARY FUND		**$**	**520,859.00**
009-000-4-399-00	INTER-FUND TRANSFER	$	520,859.00
010 - SALES TAX REBATE FUND		**$**	**1,711,200.00**
010-000-4-315-00	INTEREST INCOME	$	1,200.00
010-000-4-340-00	SALES TAX	$	825,000.00
010-000-4-341-00	HOME RULE SALES TAX	$	800,000.00
010-000-4-354-00	BUSINESS DISTRICT SALES TAX	$	85,000.00
011 - TIF #1 - BUNKUM ROAD		**$**	**199,000.00**
011-000-4-315-00	INTEREST INCOME	$	1,000.00
011-000-4-346-00	TIF REVENUE	$	180,000.00
011-000-4-399-00	INTER-FUND TRANSFER	$	18,000.00
012 - TIF #2 - SHOPPES @ ST. CLAIR		**$**	**199,000.00**
012-000-4-315-00	INTEREST INCOME	$	100.00
012-000-4-346-00	TIF REVENUE	$	310,000.00
012-000-4-399-00	INTER-FUND TRANSFER	$	31,000.00
013 - TIF #3 - LINCOLN TRAIL		**$**	**199,000.00**
013-000-4-315-00	INTEREST INCOME	$	3,500.00
013-000-4-346-00	TIF REVENUE	$	220,000.00

RETURN TO AGENDA

013-000-4-399-00	INTER-FUND TRANSFER	$	22,000.00
014 - POLICE YOUTH FUND		**$**	**3,000.00**
014-000-4-328-00	DONATIONS	$	3,000.00
015 - PARKS PROGRAMS FUND		**$**	**63,100.00**
015-000-4-315-00	INTEREST INCOME	$	100.00
015-000-4-362-00	ADVERTISING REVENUE	$	2,000.00
015-000-4-393-00	RECREATION USER FEES	$	55,000.00
015-000-4-395-00	RENTS, LEASES, SHARE CORP	$	6,000.00
030 - OPEB FUND		**$**	**245,100.00**
030-000-4-315-00	INTEREST INCOME	$	100.00
030-000-4-601-00	INSURANCE CONT - EMPLOYEE	$	115,000.00
030-000-4-601-50	INSURANCE CONT - EMPLOYER	$	130,000.00
GRAND TOTAL		**$**	**26,803,441.00**

RETURN TO AGENDA

	FY 2016-2017 EXPENSES
001 GENERAL FUND	
001-100-5-100-00	SEMI-MONTHLY SALARIES
001-100-5-100-50	ELECTED & APPT OFFICIALS
001-100-5-101-00	OVERTIME COMP
001-100-5-105-00	BONUSES
001-100-5-106-00	UNEMPLOYMENT INSURANCE
001-100-5-107-00	SOCIAL SECURITY
001-100-5-108-00	MEDICARE
001-100-5-111-00	RETIREMENT FUNDS
001-100-5-112-00	HEALTH & LIFE INS.
001-100-5-113-00	OPEB EMPLOYER CONT
001-100-5-204-00	EDUCATIONAL EXPENSE
001-100-5-205-00	LEGAL FEES
001-100-5-207-00	TRAVEL & MEETING EXP
001-100-5-220-00	BONDS, NOTARY FEES
001-100-5-225-00	MEMBERSHIP DUES
001-100-5-301-00	ADVERTISING & PUBLIC NOTICES
001-100-5-302-00	PUBLIC RELATIONS
001-100-5-304-00	EQUIPMENT RENTAL
001-100-5-320-00	TECH & OUTSIDE SERVICES
001-100-5-330-00	INSURANCE LIABILITY
001-100-5-340-00	INSURANCE DEDUCTIBLE
001-100-5-401-00	POSTAGE
001-100-5-402-00	OFFICE FURNITURE & EQUIP
001-100-5-403-00	PETTY CASH
001-100-5-426-00	SUBSCRIPTIONS-BOOKS
001-100-5-430-00	ELECTION EXPENSES
001-100-5-480-00	SUPPLIES
001-102-5-100-50	ELECTED & APPT OFFICIALS
001-102-5-107-00	SOCIAL SECURITY
001-102-5-108-00	MEDICARE
001-102-5-201-00	BOARDS & COMMITTEES
001-102-5-201-10	ELECTED OFFICIAL EXP
001-102-5-205-00	LEGAL FEES
001-102-5-207-00	TRAVEL & MEETING EXP
001-102-5-225-00	MEMBERSHIP DUES
001-102-5-302-00	PUBLIC RELATIONS
001-102-5-320-00	TECH & OUTSIDE SERVICES
001-102-5-402-00	OFFICE FURNITURE & EQUIP
001-102-5-729-00	TRANSFER TO LIBRARY FUND
001-102-5-740-00	TRANSFER TO CAPITAL RESERVE
001-104-5-100-00	SEMI-MONTHLY SALARIES
001-104-5-100-50	ELECTED & APPT OFFICIALS

RETURN TO AGENDA

001-104-5-105-00	BONUSES
001-104-5-106-00	UNEMPLOYMENT INSURANCE
001-104-5-107-00	SOCIAL SECURITY
001-104-5-108-00	MEDICARE
001-104-5-111-00	RETIREMENT FUNDS
001-104-5-112-00	HEALTH & LIFE INS.
001-104-5-113-00	OPEB EMPLOYER CONT
001-104-5-206-00	AUDIT FEES
001-104-5-207-00	TRAVEL & MEETING EXP
001-104-5-225-00	MEMBERSHIP DUES
001-104-5-320-00	TECH & OUTSIDE SERVICES
001-104-5-438-75	IT SOFTWARE
001-104-5-480-00	SUPPLIES
001-110-5-100-00	SEMI-MONTHLY SALARIES
001-110-5-101-00	OVERTIME COMP
001-110-5-102-00	SHIFT PREMIUM
001-110-5-104-00	HOLIDAY PREMIUM PAY
001-110-5-105-00	BONUSES
001-110-5-106-00	UNEMPLOYMENT INSURANCE
001-110-5-107-00	SOCIAL SECURITY
001-110-5-108-00	MEDICARE
001-110-5-111-00	RETIREMENT FUNDS
001-110-5-112-00	HEALTH & LIFE INS.
001-110-5-113-00	OPEB EMPLOYER CONT
001-110-5-201-00	BOARDS & COMMITTEES
001-110-5-204-00	EDUCATIONAL EXPENSE
001-110-5-207-00	TRAVEL & MEETING EXP
001-110-5-220-00	BONDS, NOTARY FEES
001-110-5-225-00	MEMBERSHIP DUES
001-110-5-302-00	PUBLIC RELATIONS
001-110-5-303-00	BUILDINGS RENTAL
001-110-5-304-00	EQUIPMENT RENTAL
001-110-5-320-00	TECH & OUTSIDE SERVICES
001-110-5-326-00	UNIFORM CLEANING
001-110-5-401-00	POSTAGE
001-110-5-403-00	PETTY CASH
001-110-5-425-00	UNIFORM PURCHASE
001-110-5-426-00	SUBSCRIPTIONS-BOOKS
001-110-5-438-75	IT SOFTWARE
001-110-5-450-00	MAINTENANCE TO EQUIP
001-110-5-470-00	MINOR EQUIPMENT
001-110-5-480-00	SUPPLIES
001-110-5-740-00	TRANSFER TO CAPITAL RESERVE
001-110-5-745-00	TRANSFER TO POLICE PENSION

RETURN TO AGENDA

001-115-5-100-00	SEMI-MONTHLY SALARIES
001-115-5-101-00	OVERTIME COMP
001-115-5-104-00	ALLOWANCES
001-115-5-105-00	BONUSES/INCENTIVES
001-115-5-106-00	UNEMPLOYMENT INSURANCE
001-115-5-107-00	SOCIAL SECURITY
001-115-5-108-00	MEDICARE
001-115-5-111-00	RETIREMENT FUNDS
001-115-5-112-00	HEALTH & LIFE INS.
001-115-5-113-00	OPEB EMPLOYER CONT
001-115-5-202-00	SURVEY & ENGINEER FEES
001-115-5-204-00	EDUCATIONAL EXPENSE
001-115-5-207-00	TRAVEL & MEETING EXP
001-115-5-225-00	MEMBERSHIP DUES
001-115-5-230-00	SAFETY PROGRAM
001-115-5-301-00	ADVERTISING & PUBLIC NOTICES
001-115-5-302-00	PUBLIC RELATIONS
001-115-5-304-00	EQUIPMENT RENTAL
001-115-5-306-00	TELEPHONE UTILITY
001-115-5-320-00	TECH & OUTSIDE SERVICES
001-115-5-330-00	INSURANCE LIABILITY
001-115-5-401-00	POSTAGE
001-115-5-402-00	OFFICE FURNITURE & EQUIP
001-115-5-421-00	RENOVATION OR REMODELING
001-115-5-438-00	COMPUTERS
001-115-5-438-50	IT HARDWARE
001-115-5-438-75	IT SOFTWARE
001-115-5-439-00	G.I.S. EXPENSES
001-115-5-480-00	SUPPLIES
001-115-5-740-00	TRANSFER TO CAPITAL RESERVE
001-120-5-100-00	SEMI-MONTHLY SALARIES
001-120-5-101-00	OVERTIME COMP
001-120-5-105-00	BONUSES
001-120-5-106-00	UNEMPLOYMENT INSURANCE
001-120-5-107-00	SOCIAL SECURITY
001-120-5-108-00	MEDICARE
001-120-5-111-00	RETIREMENT FUNDS
001-120-5-112-00	HEALTH & LIFE INS.
001-120-5-113-00	OPEB EMPLOYER CONT
001-120-5-202-00	SURVEY & ENGINEER FEES
001-120-5-204-00	EDUCATIONAL EXPENSE
001-120-5-207-00	TRAVEL & MEETING EXP
001-120-5-220-00	BONDS, NOTARY FEES
001-120-5-225-00	MEMBERSHIP DUES

RETURN TO AGENDA

001-120-5-302-00	PUBLIC RELATIONS
001-120-5-304-00	EQUIPMENT RENTAL
001-120-5-305-00	ELECTRIC UTILITY
001-120-5-320-00	TECH & OUTSIDE SERVICES
001-120-5-403-00	PETTY CASH
001-120-5-425-00	UNIFORM PURCHASE
001-120-5-426-00	SUBSCRIPTIONS-BOOKS
001-120-5-470-00	MINOR EQUIPMENT
001-120-5-480-00	SUPPLIES
001-120-5-740-00	TRANSFER TO CAPITAL RESERVE
001-130-5-100-00	SEMI-MONTHLY SALARIES
001-130-5-101-00	OVERTIME COMP
001-130-5-102-00	SHIFT PREMIUM
001-130-5-105-00	BONUSES
001-130-5-106-00	UNEMPLOYMENT INSURANCE
001-130-5-107-00	SOCIAL SECURITY
001-130-5-108-00	MEDICARE
001-130-5-111-00	RETIREMENT FUNDS
001-130-5-112-00	HEALTH & LIFE INS.
001-130-5-113-00	OPEB EMPLOYER CONT
001-130-5-204-00	EDUCATIONAL EXPENSE
001-130-5-207-00	TRAVEL & MEETING EXP
001-130-5-225-00	MEMBERSHIP DUES
001-130-5-304-00	EQUIPMENT RENTAL
001-130-5-320-00	TECH & OUTSIDE SERVICES
001-130-5-327-00	UNIFORM RENTAL
001-130-5-410-00	VEHICLE OP COSTS
001-130-5-425-00	UNIFORM PURCHASE
001-130-5-426-00	SUBSCRIPTIONS-BOOKS
001-130-5-450-00	MAINTENANCE TO EQUIP
001-130-5-452-00	MAINTENANCE TO ROLLING STOCK
001-130-5-470-00	MINOR EQUIPMENT
001-130-5-480-00	SUPPLIES
001-130-5-740-00	TRANSFER TO CAPITAL RESERVE
001-140-5-100-00	SEMI-MONTHLY SALARIES
001-140-5-101-00	OVERTIME COMP
001-140-5-105-00	BONUSES
001-140-5-106-00	UNEMPLOYMENT INSURANCE
001-140-5-107-00	SOCIAL SECURITY
001-140-5-108-00	MEDICARE
001-140-5-111-00	RETIREMENT FUNDS
001-140-5-112-00	HEALTH & LIFE INS.
001-140-5-113-00	OPEB EMPLOYER CONT
001-140-5-204-00	EDUCATIONAL EXPENSE

RETURN TO AGENDA

001-140-5-207-00	TRAVEL & MEETING EXP
001-140-5-225-00	MEMBERSHIP DUES
001-140-5-230-00	SAFETY PROGRAM
001-140-5-302-00	PUBLIC RELATIONS
001-140-5-304-00	EQUIPMENT RENTAL
001-140-5-305-00	ELECTRIC UTILITY
001-140-5-307-00	SEWER UTILITY
001-140-5-308-00	WATER UTILITY
001-140-5-309-00	SANITATION SERVICE
001-140-5-320-00	TECH & OUTSIDE SERVICES
001-140-5-425-00	UNIFORM PURCHASE
001-140-5-470-00	MINOR EQUIPMENT
001-140-5-480-00	SUPPLIES
001-140-5-740-00	TRANSFER TO CAPITAL RESERVE
001-150-5-100-00	SEMI-MONTHLY SALARIES
001-150-5-101-00	OVERTIME COMP
001-150-5-102-00	SHIFT PREMIUM
001-150-5-105-00	BONUSES
001-150-5-106-00	UNEMPLOYMENT INSURANCE
001-150-5-107-00	SOCIAL SECURITY
001-150-5-108-00	MEDICARE
001-150-5-111-00	RETIREMENT FUNDS
001-150-5-112-00	HEALTH & LIFE INS.
001-150-5-113-00	OPEB EMPLOYER CONT
001-150-5-204-00	EDUCATIONAL EXPENSE
001-150-5-207-00	TRAVEL & MEETING EXP
001-150-5-225-00	MEMBERSHIP DUES
001-150-5-302-00	PUBLIC RELATIONS
001-150-5-304-00	EQUIPMENT RENTAL
001-150-5-305-00	ELECTRIC UTILITY
001-150-5-307-00	SEWER UTILITY
001-150-5-308-00	WATER UTILITY
001-150-5-310-00	GAS UTILITY
001-150-5-320-00	TECH & OUTSIDE SERVICES
001-150-5-402-00	OFFICE FURNITURE & EQUIP
001-150-5-421-00	RENOVATION OR REMODELING
001-150-5-425-00	UNIFORM PURCHASE
001-150-5-450-00	MAINTENANCE TO EQUIP
001-150-5-480-00	SUPPLIES
001-150-5-740-00	TRANSFER TO CAPITAL RESERVE
001-160-5-100-00	SEMI-MONTHLY SALARIES
001-160-5-100-50	ELECTED & APPT OFFICIALS
001-160-5-101-00	OVERTIME COMP
001-160-5-102-00	SHIFT PREMIUM

RETURN TO AGENDA

001-160-5-104-00	ALLOWANCES
001-160-5-105-00	BONUSES
001-160-5-106-00	UNEMPLOYMENT INSURANCE
001-160-5-107-00	SOCIAL SECURITY
001-160-5-108-00	MEDICARE
001-160-5-111-00	RETIREMENT FUNDS
001-160-5-112-00	HEALTH & LIFE INS.
001-160-5-113-00	OPEB EMPLOYER CONT
001-160-5-201-00	BOARDS & COMMITTEES
001-160-5-204-00	EDUCATIONAL EXPENSE
001-160-5-205-00	LEGAL FEES
001-160-5-207-00	AUDIT FEES
001-160-5-225-00	TRAVEL & MEETING EXP
001-160-5-301-00	ADVERTISING & PUBLIC NOTICES
001-160-5-320-00	TECH & OUTSIDE SERVICES
001-160-5-402-00	OFFICE FURNITURE & EQUIP
001-160-5-403-00	PETTY CASH
001-160-5-421-00	RENOVATION OR REMODELING
001-160-5-425-00	UNIFORM PURCHASE
001-160-5-426-00	SUBSCRIPTIONS-BOOKS
001-160-5-438-75	IT SOFTWARE
001-160-5-439-00	G.I.S. EXPENSES
001-160-5-480-00	SUPPLIES
001-160-5-731-00	TRANSFER TO TIF #1
001-160-5-732-00	TRANSFER TO TIF #2
001-160-5-733-00	TRANSFER TO TIF#3
001-160-5-740-00	TRANSFER TO CAPITAL RESERVE
001-170-5-100-00	SEMI-MONTHLY SALARIES
001-170-5-102-00	SHIFT PREMIUM
001-170-5-105-00	BONUSES
001-170-5-106-00	UNEMPLOYMENT INSURANCE
001-170-5-107-00	SOCIAL SECURITY
001-170-5-108-00	MEDICARE
001-170-5-111-00	RETIREMENT FUNDS
001-170-5-112-00	HEALTH & LIFE INS.
001-170-5-113-00	OPEB EMPLOYER CONT
001-170-5-305-00	ELECTRIC UTILITY
001-170-5-307-00	SEWER UTILITY
001-170-5-308-00	WATER UTILITY
001-170-5-480-00	SUPPLIES
001-181-5-100-50	ELECTED & APPT OFFICIALS
001-181-5-204-00	EDUCATIONAL EXPENSE
001-181-5-207-00	TRAVEL & MEETING EXP
001-181-5-225-00	MEMBERSHIP DUES

RETURN TO AGENDA

001-181-5-302-00	PUBLIC RELATIONS
001-181-5-306-00	TELEPHONE UTILITY
001-181-5-320-00	TECH & OUTSIDE SERVICES
001-181-5-401-00	POSTAGE
001-181-5-426-00	SUBSCRIPTIONS-BOOKS
001-181-5-450-00	MAINTENANCE TO EQUIP
001-181-5-480-00	SUPPLIES
002 MOTOR FUEL TAX FUND	
002-120-5-100-00	SEMI-MONTHLY SALARIES
002-120-5-106-00	UNEMPLOYMENT INSURANCE
002-120-5-107-00	SOCIAL SECURITY
002-120-5-108-00	MEDICARE
002-120-5-111-00	RETIREMENT FUNDS
002-120-5-305-00	ELECTRIC UTILITY
002-120-5-320-00	TECH & OUTSIDE SERVICES
002-120-5-450-00	MAINTENANCE TO EQUIP
002-120-5-480-00	SUPPLIES
003 FOOD & BEVERAGE TAX FUND	
003-104-5-206-00	AUDIT FEES
003-104-5-320-00	TECH & OUTSIDE SERVICES
003-104-5-601-00	DEBT - PRINCIPLE
003-104-5-602-00	DEBT - INTEREST
004 HOTEL/MOTEL TAX FUND	
004-100-5-302-00	PUBLIC RELATIONS
004-102-5-302-00	PUBLIC RELATIONS
004-104-5-206-00	AUDIT FEES
004-104-5-601-00	DEBT - PRINCIPLE
004-104-5-602-00	DEBT - INTEREST
004-110-5-101-00	OVERTIME COMP
004-140-5-202-00	SURVEY & ENGINEER FEES
004-140-5-302-00	PUBLIC RELATIONS
005 HOME RULE TAX FUND	
005-110-5-502-00	EQUIPMENT & ROLLING STOCK
005-110-5-504-00	BUILDINGS & STRUCTURES
005-110-5-505-00	STREETS & ALLEYS
005-110-5-507-00	OTHER CAPITAL IMPROVEMENTS
005-120-5-501-20	EASEMENTS
005-120-5-502-00	EQUIPMENT & ROLLING STOCK
005-120-5-503-00	EQUIPMENT ACCESSORIES
005-120-5-505-00	SURVEY & ENGINEER FEES
005-120-5-506-00	STORM DRAINAGE
005-120-5-603-00	OTHER DEBT SERVICE
005-140-5-504-00	BUILDINGS & STRUCTURES
005-140-5-507-00	OTHER CAPITAL IMPROVEMENTS

RETURN TO AGENDA

005-150-5-503-00	SURVEY/ENGINEERING CAPITAL
005-150-5-504-00	BUILDINGS & STRUCTURES
005-160-5-345-00	DEMOLITION SERVICE
005-160-5-503-00	SURVEY/ENGINEERING CAPITAL
005-160-5-505-00	STREETS & ALLEYS
005-181-5-504-00	BUILDINGS & STRUCTURES
007 POLICE PENSION FUND	
007-110-5-110-00	RETIREMENT - POLICE PENSION
009 LIBRARY FUND	
009-170-5-100-00	SEMI-MONTHLY SALARIES
009-170-5-101-00	OVERTIME COMP
009-170-5-102-00	SHIFT PREMIUM
009-170-5-105-00	BONUSES
009-170-5-107-00	SOCIAL SECURITY
009-170-5-108-00	MEDICARE
009-170-5-111-00	RETIREMENT FUNDS
009-170-5-207-00	TRAVEL & MEETING EXP
009-170-5-225-00	MEMBERSHIP DUES
009-170-5-302-00	PUBLIC RELATIONS
009-170-5-306-00	TELEPHONE UTILITY
009-170-5-320-00	TECH & OUTSIDE SERVICES
009-170-5-426-00	SUBSCRIPTIONS-BOOKS
009-170-5-450-00	MAINTENANCE TO EQUIP
009-170-5-480-00	SUPPLIES
010 SALES TAX REBATE FUND	
010-104-5-312-00	SALES TAX REBATE
010-104-5-315-00	INTERGOVERNMENT AGREEMENTS
011 TIF #1 - BUNKUM ROAD	
011-160-5-206-00	AUDIT FEES
011-160-5-372-00	TIF EXPENDITURES
011-160-5-501-10	RIGHT OF WAY
012 TIF #2 - SHOPPES @ ST. CLAIR	
012-160-5-206-00	AUDIT FEES
012-160-5-372-00	TIF EXPENDITURES
013 TIF #3 - LINCOLN TRAIL	
013-160-5-206-00	AUDIT FEES
013-160-5-345-00	DEMOLITION SERVICE
013-160-5-470-00	MINOR EQUIPMENT
013-160-5-499-00	CONTINGENCIES
013-160-5-501-20	EASEMENTS
013-160-5-503-00	SURVEY/ENGINEERING CAPITAL
013-160-5-572-00	TIF EXPENDITURES
014 POLICE YOUTH FUND	
014-110-5-480-00	SUPPLIES

RETURN TO AGENDA

015 - PARKS PROGRAM FUND	
015-140-5-100-00	SEMI-MONTHLY SALARIES
015-140-5-106-00	UNEMPLOYMENT INSURANCE
015-140-5-107-00	SOCIAL SECURITY
015-140-5-108-00	MEDICARE
015-140-5-320-00	TECH & OUTSIDE SERVICES
015-140-5-401-00	POSTAGE
015-140-5-421-00	RENOVATION OR REMODELING
015-140-5-480-00	SUPPLIES
024 - TIF #4 - FH WEST	
024-160-5-206-00	AUDIT FEES
030 - OPEB FUND	
030-100-5-112-00	HEALTH & LIFE INS.
GRAND TOTAL	

RETURN TO AGENDA

$	17,130,849.00
$	169,400.00
$	9,600.00
$	300.00
$	800.00
$	1,400.00
$	11,000.00
$	2,500.00
$	20,328.00
$	60,000.00
$	3,181.00
$	2,000.00
$	400.00
$	3,100.00
$	100.00
$	2,320.00
$	13,000.00
$	4,300.00
$	1,000.00
$	5,000.00
$	398,900.00
$	30,000.00
$	11,000.00
$	600.00
$	75.00
$	200.00
$	2,000.00
$	16,000.00
$	117,600.00
$	7,300.00
$	1,750.00
$	3,500.00
$	3,050.00
$	264,500.00
$	21,000.00
$	400.00
$	200.00
$	4,200.00
$	700.00
$	520,859.00
$	10,000.00
$	192,300.00
$	12.00

RETURN TO AGENDA

$	600.00
$	900.00
$	12,000.00
$	2,800.00
$	22,800.00
$	45,000.00
$	3,400.00
$	61,500.00
$	6,000.00
$	500.00
$	1,400.00
$	19,775.00
$	5,500.00
$	4,537,692.00
$	267,000.00
$	13,140.00
$	4,320.00
$	11,050.00
$	25,000.00
$	57,706.00
$	70,311.00
$	106,557.00
$	890,000.00
$	77,000.00
$	15,000.00
$	34,300.00
$	15,000.00
$	2,200.00
$	2,815.00
$	9,075.00
$	5,000.00
$	29,650.00
$	46,600.00
$	4,300.00
$	6,800.00
$	300.00
$	21,500.00
$	1,200.00
$	75,400.00
$	45,650.00
$	12,000.00
$	29,200.00
$	20,000.00
$	1,300,000.00

RETURN TO AGENDA

$	464,992.00
$	6,000.00
$	4,200.00
$	26,050.00
$	2,500.00
$	30,817.00
$	7,207.00
$	59,148.00
$	129,800.00
$	8,698.00
$	150,000.00
$	2,750.00
$	28,500.00
$	7,090.00
$	350.00
$	17,430.00
$	6,000.00
$	91,760.00
$	76,000.00
$	79,500.00
$	830,400.00
$	1,500.00
$	6,250.00
$	10,000.00
$	140,000.00
$	41,750.00
$	46,000.00
$	5,000.00
$	2,550.00
$	10,000.00
$	1,020,226.00
$	15,000.00
$	5,600.00
$	6,000.00
$	82,090.00
$	25,500.00
$	154,000.00
$	369,300.00
$	25,500.00
$	10,000.00
$	4,000.00
$	4,000.00
$	200.00
$	1,500.00

RETURN TO AGENDA

$	1,000.00
$	32,000.00
$	2,000.00
$	161,000.00
$	100.00
$	10,000.00
$	200.00
$	4,000.00
$	31,100.00
$	15,000.00
$	240,000.00
$	5,000.00
$	300.00
$	800.00
$	1,500.00
$	14,790.00
$	3,468.00
$	27,540.00
$	42,000.00
$	4,250.00
$	1,800.00
$	750.00
$	180.00
$	200.00
$	6,000.00
$	4,000.00
$	220,000.00
$	1,500.00
$	500.00
$	2,500.00
$	59,500.00
$	16,000.00
$	114,600.00
$	15,000.00
$	267,933.00
$	5,000.00
$	1,100.00
$	2,300.00
$	17,000.00
$	4,100.00
$	33,000.00
$	66,000.00
$	5,000.00
$	14,000.00

RETURN TO AGENDA

$	3,100.00
$	850.00
$	1,500.00
$	25,800.00
$	2,000.00
$	18,000.00
$	5,000.00
$	11,000.00
$	14,500.00
$	3,155.00
$	500.00
$	3,400.00
$	74,000.00
$	15,000.00
$	214,715.00
$	5,000.00
$	300.00
$	750.00
$	2,000.00
$	14,790.00
$	3,468.00
$	27,540.00
$	42,000.00
$	4,000.00
$	1,000.00
$	500.00
$	150.00
$	7,500.00
$	1,000.00
$	120,000.00
$	6,000.00
$	16,000.00
$	2,000.00
$	93,000.00
$	1,000.00
$	15,000.00
$	1,500.00
$	10,500.00
$	35,000.00
$	15,000.00
$	436,300.00
$	27,900.00
$	5,000.00
$	100.00

RETURN TO AGENDA

$	1,800.00
$	2,000.00
$	3,500.00
$	35,000.00
$	7,300.00
$	57,000.00
$	115,000.00
$	8,800.00
$	2,585.00
$	250.00
$	1,600.00
$	2,900.00
$	1,790.00
$	2,100.00
$	31,900.00
$	750.00
$	60.00
$	2,500.00
$	1,875.00
$	1,000.00
$	10,000.00
$	11,500.00
$	7,425.00
$	22,000.00
$	32,000.00
$	25,000.00
$	10,000.00
$	22,440.00
$	140.00
$	550.00
$	3,264.00
$	1,505.00
$	357.00
$	2,400.00
$	36,050.00
$	5,500.00
$	25,000.00
$	700.00
$	5,000.00
$	2,100.00
$	10,000.00
$	500.00
$	1,000.00
$	130.00

RETURN TO AGENDA

$	250.00
$	1,650.00
$	17,200.00
$	150.00
$	25.00
$	6,000.00
$	1,500.00
$	**851,970.00**
$	211,400.00
$	900.00
$	14,000.00
$	3,500.00
$	25,200.00
$	160,000.00
$	120,125.00
$	10,000.00
$	306,845.00
$	**631,726.00**
$	1,200.00
$	1,400.00
$	615,000.00
$	14,126.00
$	**1,213,834.00**
$	3,500.00
$	135,000.00
$	1,200.00
$	265,000.00
$	39,984.00
$	20,150.00
$	700,000.00
$	49,000.00
$	**7,754,844.00**
$	52,320.00
$	50,000.00
$	50,000.00
$	250,000.00
$	38,500.00
$	423,000.00
$	346,000.00
$	2,418,000.00
$	1,040,000.00
$	62,024.00
$	360,000.00
$	444,000.00

RETURN TO AGENDA

$	60,000.00
$	650,000.00
$	90,000.00
$	116,950.00
$	1,231,000.00
$	73,050.00
$	**1,300,000.00**
$	1,300,000.00
$	**519,325.00**
$	328,085.00
$	800.00
$	1,300.00
$	450.00
$	20,500.00
$	4,800.00
$	37,200.00
$	1,500.00
$	425.00
$	2,000.00
$	5,600.00
$	21,910.00
$	82,075.00
$	2,480.00
$	10,200.00
$	**1,670,000.00**
$	1,605,000.00
$	65,000.00
$	**56,825.00**
$	1,825.00
$	45,000.00
$	10,000.00
$	**351,825.00**
$	1,825.00
$	350,000.00
$	**323,025.00**
$	1,825.00
$	25,000.00
$	1,200.00
$	10,000.00
$	25,000.00
$	50,000.00
$	210,000.00
$	**5,000.00**
$	5,000.00

RETURN TO AGENDA

$	**106,375.00**
$	10,000.00
$	300.00
$	700.00
$	175.00
$	23,200.00
$	7,000.00
$	40,000.00
$	25,000.00
$	**1,825.00**
$	1,825.00
$	**181,700.00**
$	181,700.00
$	**32,099,123.00**

RETURN TO AGENDA

PROPOSED ORDINANCE NO. 15-'16

AN ORDINANCE AMENDING ORDINANCE NO. 190, "THE REVISED CODE", CHAPTER 14, "THE DEVELOPMENT CODE," SECTION 14-2-3, "ZONE DISTRICT MAP AND BOUNDARIES" BY CHANGING THE ZONE DISTRICT OF CERTAIN REAL PROPERTY COMMONLY KNOWN AS 9109 ST. CLAIR AVENUE AND 1407 SECOND STREET, FROM "R5" SINGLE-FAMILY DWELLING DISTRICT TO "PB" PLANNED BUSINESS DISTRICT.

WHEREAS, the Planning Commission on March 8, 2016 held the necessary Public Hearing and reviewed the proposed Zoning Map Amendment and has transmitted its Advisory Report to the City Council.

NOW, THEREFORE, BE IT ORDAINED BY THE CITY COUNCIL OF THE CITY OF FAIRVIEW HEIGHTS, ILLINOIS:

SECTION 1. AMENDMENT. Amendment of Ordinance No. 190, "The Revised Code," Chapter 14, "Development Code," Section 14-2-3, "Zone District Map and Boundaries" by changing the zone district of certain described real property commonly known 9109 St. Clair Avenue and 1407 Second Street from "R5" Single-Family Dwelling District to "PB" Planned Business District, is hereby approved.

A copy of the Area Zoned District Map is attached hereto, made a part hereof and marked "EXHIBIT A." A copy of the Planning Commission advisory is attached hereto, made a part hereof and marked Exhibit "B". A copy of the Planning Commission Resolution 005-16 recommending approval is attached hereto, made a part hereof and marked "EXHIBIT C."

SECTION 2. LEGAL DESCRIPTION. Property legally described as follows: Lots 12 and 13, of "Davinroy Place 1st Addition"; reference being had to the plat thereof recorded in the Recorder's Office of St. Clair County, Illinois,

SECTION 3: PASSAGE. This Ordinance shall be in full force and effect after its passage and approval as provided by law.

READ FIRST TIME: April 5, 2016

READ SECOND TIME:

RETURN TO AGENDA

PASSED:

APPROVED:

MARK T. KUPSKY - MAYOR
CITY OF FAIRVIEW HEIGHTS

ATTEST:

KAREN J. KAUFHOLD - CITY CLERK

EXHIBIT "A"

RETURN TO AGENDA

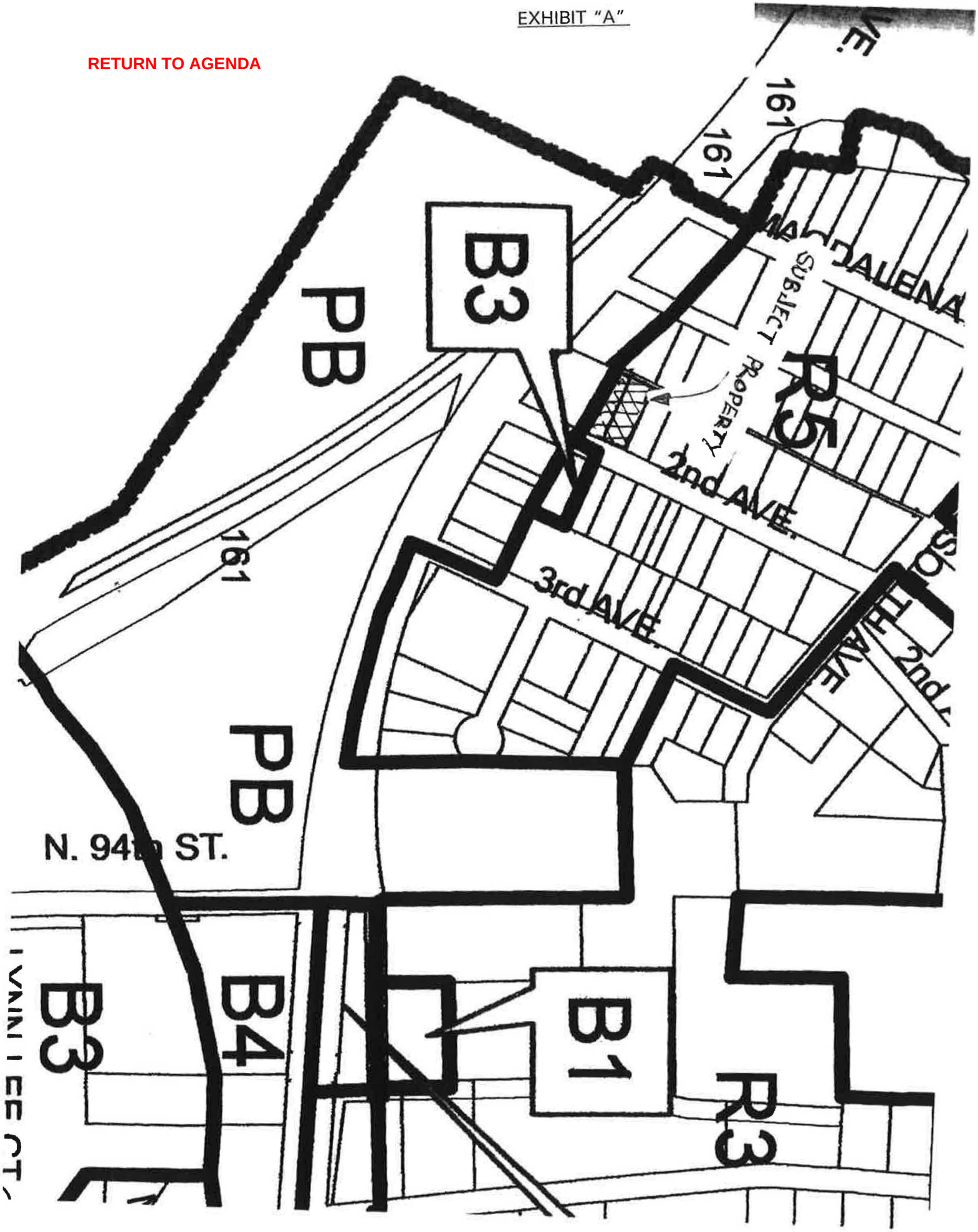

EXHIBIT "B"

RETURN TO AGENDA

CITY OF FAIRVIEW HEIGHTS

10025 Bunkum Road ♦ Fairview Heights, Illinois 62208 ♦ Phone: (618) 489-2000 ♦ www.cofh.org

March 14, 2016

Fairview Heights City Council
10025 Bunkum Road
Fairview Heights, IL 62208

Dear City Council Members:

The petition listed below is hereby transmitted for your consideration:

Petition No:	***PC05-16***
Petitioner:	Gene Quayle
Request:	Zoning Map Amendment- Planned Business District
Area Size:	Approximately 13,000 square feet
Location:	9109 St. Clair Ave. & 1407 Second St.
Hearing Date:	March 8, 2016
Recommendation:	Approval
Votes:	AYE: Wesemann, Correale, Mensing, Herrington, Bramstedt, Hoppe, Smith, and Sudja NAY: Barkley ABSENT: Funk and McCarthy
Report:	Staff Advisory (Exhibit I)
Ward:	I

Respectfully,

Jim Bramstedt, Chairman
Planning Commission

RETURN TO AGENDA

PC05-16, Zoning Map Amendment – Gene Quayle, 9109 St. Clair Avenue & 1404 Second Street

ZONING MAP AMENDMENT REQUEST

The Applicant is petitioning to rezone the subject property to "PB Planned Business District." The following is excerpt from the City' Development Code regarding 'PB' District.

14-2-13 "PB" PLANNED BUSINESS DISTRICT.

*(A) **Scope of Provisions.** This Section contains the district regulations of the "PB" Planned Business District. These regulations are supplemented and qualified by additional general regulations appearing elsewhere the Code, which are incorporated as part of this Section by reference. The Planned Business District shall be described in the manner outlined below.*

*(B) **Purpose.** The "PB" Planned Business District encompasses areas where a variety of commercial developments and uses may be permitted. It is the purpose of these regulations to facilitate the establishment of commercial developments and uses in locations appropriate under approved site development plans and conditions. Such approved plans and conditions shall be consistent with good planning practice and compatible with permitted developments and uses in adjoining districts and properties, so as to protect the general welfare.*

PLANNING CONSIDERATIONS

The subject properties are currently zoned R5 Single Family Residential. The properties contain a combined total of approximately 13,300 square feet. The southernmost parcel (PIN 02-25.0-105-031) is part of the Quayle Automotive service station which contains the underground gasoline storage tanks and parking area and has been utilized for those purposes since 1970. The northern parcel (PIN 02-25.0-301-030) identified as 1407 Second Street contains an enclosed automobile storage yard and building on the westerly 80 feet of the parcel. The storage yard is enclosed by a chain-link fence, interwoven slats and topped with barbed wire.

The adjoining properties to the west, north and east are zoned "R5" Single Family Residential and are developed with detached single family homes with the exception of one of the adjoining properties to the east being zoned B-3 Community Business District and developed with the French Village Fire Station. Immediately south of the parcels and owned by applicant the parcel is zoned PB Planned Business District and developed with Quayle's Automotive service station with gasoline pumps, canopy, building with service bays, and additional parking areas. The other properties along St. Clair Ave. are zoned Planned Business and used by a variety commercial enterprises.

COMPRHENSIVE PLAN

RETURN TO AGENDA

The 2012 Comprehensive Plan has identified this area as Corridor Commercial serving the needs of the community as well as passing motorists. It is further identified in the Commercial Areas Plan section for a commercial node servicing Metro-Link users and over the long term mixed use development is to be encouraged.

There is a proposed plan for these particular parcel for development as an impound storage yard to be considered simultaneously as PC 06-16.

Exhibits:

1. Staff Advisory
2. Application
3. Aerial Image
4. Zoning Map
5. Public Notice
6. Surrounding Property Owners

EXHIBIT "C"

RETURN TO AGENDA

Planning Commissioner Smith introduced the following resolution and moved for its adoption:

RESOLUTION PC 005 -16

A RESOLUTION ADOPTING FINDINGS OF FACT FOR PC05-16 RELATING TO A REQUEST FROM GENE QUAYLE TO ALLOW ZONING MAP AMENDMENT FOR PROPERTY CURRENTLY ZONED R5 SINGLE FAMILY RESIDENTIAL TO PB PLANNED BUSINESS DISTRICT.

WHEREAS, Gene Quayle, hereinafter referred to as the "Applicant," has properly applied for a Zoning Map Amendment approval for property currently Zoned R5 Single Family Residential to "PB" Planned Business District located at the rear of 9109 St. Clair Ave, PIN 02-25.0-105-031 and 1407 Second Ave., PIN 02-25.0-105-030.

NOW THEREFORE, BE IT RESOLVED BY THIS PLANNING COMMISSION OF THE CITY OF FAIRVIEW HEIGHTS, ST. CLAIR COUNTY, STATE OF ILLINOIS that the findings of fact relating to the request are determined to be as follows:

1. That the Applicant appeared before the Planning Commission for a public hearing pursuant to Section 14-10-8 of the City of Fairview Heights Development Code on March 8, 2016 and that said public hearing was properly advertised and that the minutes of said public hearing are hereby incorporated by reference.

2. The subject's southernmost parcel (PIN 02-25.0-105-031) is part of the Quayle Automotive service station which contains the underground gasoline storage tanks, trash dumpster, and parking area having been utilized for those purposes since 1970. The northern parcel (PIN 02-25.0-301-030) identified as 1407 Second Street contains an enclosed automobile storage yard and building on the westerly 80 feet of the parcel

3. That the Subject Property contains approximately 13,300 square feet.

4. That this permit will not require any changes to traffic circulation and ingress/egress.

5. That this permit will not require any changes to lighting, landscaping, or the existing site usage.

RETURN TO AGENDA

6. That the proposed use will not be unduly dangerous or otherwise detrimental to persons residing or working in the vicinity of the use or to the public welfare.

7. That the proposed use will not substantially adversely impair the use, enjoyment, or market value of any surrounding property.

8. That the proposed use will not be hazardous or disturbing to existing neighboring uses.

9. That the proposed use will be served adequately by public facilities and services such as highways and streets.

10. That the proposed use will not create excessive additional requirements at public cost for public facilities and services, and it will not be detrimental to the economic welfare of the community.

11. That the proposed use will not involve activities and uses that will be detrimental to any persons, property, or the general welfare by reason of excessive production of traffic, noise, smoke fumes, glare or odors.

12. The proposed use will be consistent with the Comprehensive Plan.

13. That the Permittee shall be responsible for all City costs incurred in administering and enforcing this Permit.

14. That the Director of Land Use, and his/her designee, shall have the right to inspect the premises for compliance and safety purposes annually or at any time, upon reasonable request.

The motion for the adoption of the foregoing resolution was duly seconded by; upon vote being taken thereon, the following voted in favor thereof: Herrington, Mensing, Wesemann, Correale, Sudja, Smith, Hoppe and Bramstedt

and the following voted against the same: Barkley

and the following abstained: None

and the following were absent: Funk and McCarthy.

RETURN TO AGENDA

Whereupon said resolution was declared duly passed and adopted by the Fairview Heights Planning Commission this the 8th day of March, 2016.

_____
Planning Commission Chairman

ATTEST:

_____
Land Use Director

RETURN TO AGENDA

PROPOSED ORDINANCE NO. 16-'16

AN ORDINANCE APPROVING A DEVELOPMENT PLAN FOR AN IMPOUND/STORAGE LOT, WITHIN THE PLANNED BUSINESS DISTRICT, LOCATED AT 9109 ST. CLAIR AVENUE AND 1407 SECOND AVENUE.

WHEREAS, the Planning Commission on December March 8, 2016 held the necessary Public Hearing and reviewed the Development Plan application and has transmitted its Advisory Report to the City Council.

NOW, THEREFORE, BE IT ORDAINED BY THE CITY COUNCIL OF THE CITY OF FAIRVIEW HEIGHTS, ILLINOIS:

SECTION 1. APPROVAL. The Development Plan for a impound storage lot, within the Planned Business District, at 9109 St. Clair Avenue and 1407 Second Avenue is hereby approved. A copy of the Planning Commission's Advisory Report is attached hereto, made a part hereof and marked "EXHIBIT A." A copy of the site plan is attached hereto, made a part hereof, and marked "EXHIBIT B."

SECTION 2. CONDITIONS. The conditions of this Development Plan are contained in the Findings of Fact adopted by Planning Commission Resolution PC006-16 attached hereto, made a part hereof, and marked "EXHIBIT C."

SECTION 3. PASSAGE. This Ordinance shall be in full force and effect from and after its passage and approval as provided by law.

READ FIRST TIME: April 5, 2016

READ SECOND TIME:

PASSED:

APPROVED:

RETURN TO AGENDA

MARK T. KUPSKY - MAYOR
CITY OF FAIRVIEW HEIGHTS

ATTEST:

KAREN J. KAUFHOLD - CITY CLERK

EXHIBIT "A"

RETURN TO AGENDA

CITY OF FAIRVIEW HEIGHTS

10025 Bunkum Road ♦ Fairview Heights, Illinois 62208 ♦ Phone: (618) 489-2000 ♦ www.cofh.org

March 14, 2016

Fairview Heights City Council
10025 Bunkum Road
Fairview Heights, IL 62208

Dear City Council Members:

The petition listed below is hereby transmitted for your consideration:

Petition No:	***PC06-16***
Petitioner:	Gene Quayle
Request:	Development Plan
Area Size:	Approximately 13,000 square feet
Location:	9109 St. Clair Ave. & 1407 Second St.
Hearing Date:	March 8, 2016
Recommendation:	Approval
Votes:	AYE: Wesemann, Correale, Mensing, Herrington, Bramstedt, Hoppe, Smith, and Sudja NAY: Barkley ABSENT: Funk and McCarthy
Report:	Staff Advisory (Exhibit I)
Ward:	I

Respectfully,

Jim Bramstedt, Chairman
Planning Commission

RETURN TO AGENDA

PC 06-16, Development Plan – Gene Quayle, 9109 St. Clair Avenue & 1404 Second Street

DEVELOPMENT PLAN REQUEST

The Applicant, Gene Quayle, is petitioning to develop the subject property to allow for the continued and expanded use of the property as an impound/ storage lot. Applicant indicates that impound/storage lot has been in use since 2004 within the enclosed area. Applicant is seeking to expand the area utilized for storage on parcel identified as (PIN 02-25.0-301-030) 1407 Second Street by extending the fence along the northern property to a point within ten (10) feet of the 2nd Avenue property line allowing for a twenty (20) foot triangular area at the end of adjoining driveway. The area outside of fence adjoining Second Street is to be planted as buffer yard with arborvitae.

14-2-13 "PB" PLANNED BUSINESS DISTRICT.

*(A) **Scope of Provisions.** This Section contains the district regulations of the "PB" Planned Business District. These regulations are supplemented and qualified by additional general regulations appearing elsewhere the Code, which are incorporated as part of this Section by reference. The Planned Business District shall be described in the manner outlined below.*

*(B) **Purpose.** The "PB" Planned Business District encompasses areas where a variety of commercial developments and uses may be permitted. It is the purpose of these regulations to facilitate the establishment of commercial developments and uses in locations appropriate under approved site development plans and conditions. Such approved plans and conditions shall be consistent with good planning practice and compatible with permitted developments and uses in adjoining districts and properties, so as to protect the general welfare.*

PLANNING CONSIDERATIONS

Area Land Use and Zoning

The subject properties are proposed to be zoned PB Planned Business. The properties contain a combined total of approximately 13,300 square feet. The southernmost parcel (PIN 02-25.0-105-031) is part of the Quayle Automotive service station which contains the underground gasoline storage tanks, trash dumpster and parking area having been utilized for those purposes since 1970. The northern parcel (PIN 02-25.0-301-030) identified as 1407 Second Street contains an enclosed automobile storage yard and building on the westerly 80 feet of the parcel. The storage yard is enclosed by a chain-link fence, interwoven slats and topped with barbed wire.

The adjoining properties to the west, north and east are zoned "R3" Single Family Residential and are developed with detached single family homes with the exception of one of the adjoining properties to the east being zoned B-3 Community Business District

RETURN TO AGENDA

and developed with the French Village Fire Station. Immediately south of the parcels and owned by applicant the parcel is zoned PB Planned Business District and developed with Quayle's Automotive service station with gasoline pumps, canopy, building with service bays, and additional parking areas. The other properties along St. Clair Ave. are zoned Planned Business and used by a variety commercial enterprises.

Buffer and Setback

Section 14-4-23.1 "Buffer Standards, General Standards" which states that buffers shall be located on the outer perimeter of a lot or parcel, extending to the lot or parcel boundary line, or between differing land uses on a single parcel, but may not occupy any portion of a dedicated or reserved public or private street or right of way. The table of buffer requirements details the width and density of the planting based on the intensity of the proposed development or use and the uses which are developed on the adjacent properties. Table 14.4.23.1 (D) is attached for reference. The Applicant shows that they have provided for a 10 foot Bufferyard on the east side and no buffer yard on the north or west side. There is an approximate 7.5 foot (alley) open grass area on the west side between subject and residential property, on the north side they will be adding a six foot high privacy fence.

COMPREHENSIVE PLAN

The 2012 Comprehensive Plan has identified this area as Corridor Commercial serving the needs of the community as well as passing motorists. It is further identified in the Commercial Areas Plan section for a commercial node servicing Metro-Link users and over the long term mixed use development is to be encouraged. The Plan also seeks to protect residential areas from negative impacts of intense uses.

There is a petition for these particular parcels to be zoned Planned Business District to allow the impound/storage yard by PC 05-16.

Exhibits:

1. Staff Advisory
2. Application
3. Narrative
4. Site Plan
5. Aerial and Site Photos
6. Public Notice
7. Surrounding Property Owners

EXHIBIT "B"

RETURN TO AGENDA

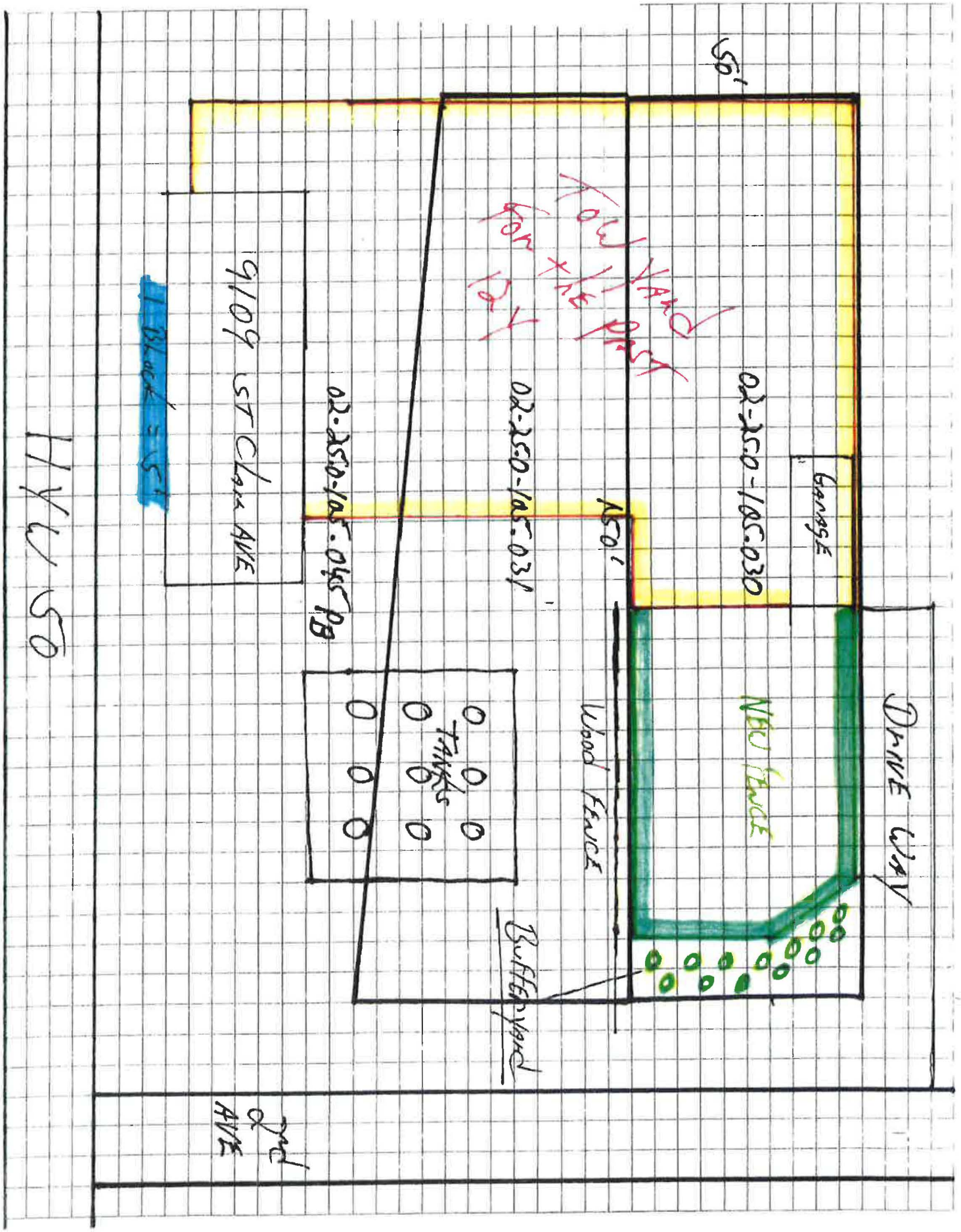

EXHIBIT "C"

RETURN TO AGENDA

Planning Commissioner Smith introduced the following resolution and moved for its adoption:

RESOLUTION PC 006 -16

A RESOLUTION ADOPTING FINDINGS OF FACT FOR PC06-16 RELATING TO A REQUEST FROM GENE QUAYLE TO ALLOW THE DEVELOPEMNT OF AN IMPOUND STORAGE YARD CONTIGENT ON ZONING MAP AMENDMENT TO PB PLANNED BUSINESS DISTRICT

WHEREAS, Gene Quayle, hereinafter referred to as the "Applicant," has properly applied for a Development Plan approval for property currently Zoned R5 Single Family Residential and proposed to be rezoned "PB" Planned Business District located at the rear of 9109 St. Clair Ave, PIN 02-25.0-105-031 and 1407 Second Ave., PIN 02-25.0-105-030.

NOW THEREFORE, BE IT RESOLVED BY THIS PLANNING COMMISSION OF THE CITY OF FAIRVIEW HEIGHTS, ST. CLAIR COUNTY, STATE OF ILLINOIS that the findings of fact relating to the request are determined to be as follows:

1. That the Applicant appeared before the Planning Commission for a public hearing pursuant to Section 14-10-8 of the City of Fairview Heights Development Code on March 8, 2016 and that said public hearing was properly advertised and that the minutes of said public hearing are hereby incorporated by reference.

2. The subject's southernmost parcel (PIN 02-25.0-105-031) is part of the Quayle Automotive service station which contains the underground gasoline storage tanks, trash dumpster, and parking area having been utilized for those purposes since 1970. The northern parcel (PIN 02-25.0-301-030) identified as 1407 Second Street contains an enclosed automobile storage yard and building on the westerly 80 feet of the parcel

3. That the Subject Property contains approximately 13,300 square feet.

4. That this permit will not require any changes to traffic circulation and ingress/egress.

5. That this permit will/will not require any changes to lighting, landscaping, or the existing site usage.

6. That the proposed usewill not be unduly dangerous or otherwise detrimental to persons residing or working in the vicinity of the use or to the public welfare.

RETURN TO AGENDA

7. That the proposed use will not substantially adversely impair the use, enjoyment, or market value of any surrounding property.

8. That the proposed use will not be hazardous or disturbing to existing neighboring uses.

9. That the proposed use will be served adequately by public facilities and services such as highways and streets.

10. That the proposed use will not create excessive additional requirements at public cost for public facilities and services, and it will not be detrimental to the economic welfare of the community.

11. That the proposed use will not involve activities and uses that will be detrimental to any persons, property, or the general welfare by reason of excessive production of traffic, noise, smoke fumes, glare or odors.

12. The proposed use will be consistent with the Comprehensive Plan.

13. That the new enclosing fence shall be eight (8) feet high vinyl with shrubbery as indicated on site plan.

14. That the stacking of vehicles shall be prohibited.

15. That all vehicles shall be within the enclosure.

16. That this Development Plan approval will allow for the applicant's use of business zoned property for an impound storage yard at the property as it is proposed per the Development Plan by the Applicant.

17. That the Development Plan approval shall be contingent upon the Department of Public Works approval of the drainage and grading plan, the storm water management plan, the erosion control plan and other relevant planning design documents.

18. That the Permittee shall be responsible for all City costs incurred in administering and enforcing this Permit.

19. That the Director of Land Use, and his/her designee, shall have the right to inspect the premises for compliance and safety purposes annually or at any time, upon reasonable request.

20. That this Development Plan Approval shall automatically expire if the use is not initiated within twelve months of approval by City Council.

RETURN TO AGENDA

The motion for the adoption of the foregoing resolution was duly seconded by; upon vote being taken thereon, the following voted in favor thereof: Herrington, Mensing, Wesemann, Correale, Sudja, Smith, Hoppe and Bramstedt

and the following voted against the same: Barkley

and the following abstained: None

and the following were absent: Funk and McCarthy

whereupon said resolution was declared duly passed and adopted by the Fairview Heights Planning Commission this the 8th day of March, 2016.

_____
Planning Commission Chairman

ATTEST:

_____
Land Use Director

Gene Quayle, hereby acknowledges receipt of this Resolution and that he has reviewed the conditions of this Resolution and have agreed that he will comply with the terms of this Resolution.

By:_____ Its:_____

STATE OF ILLINOIS)
) SS.
COUNTY OF _____)

On this ____ day of _____, 2016 before me, a Notary Public, personally appeared _____, the applicant, to be known to be the person described in and who executed the foregoing instrument and acknowledged that they executed the same as their free act and deed.

_____

RETURN TO AGENDA

PROPOSED ORDINANCE NO. 18-'16

AN ORDINANCE FIXING A TIME AND PLACE FOR A PUBLIC HEARING CONCERNING THE LUDWIG DRIVE REDEVELOPMENT PROJECT AREA REDEVELOPMENT PLAN.

WHEREAS, on April 5, 2016, the City placed on file with the City Clerk, for public inspection, the "Ludwig Drive Redevelopment Project Area Tax Increment Financing Redevelopment Plan" (the "Plan"), dated March 24, 2016, which provides the basis for the eligibility of said area; and,

WHEREAS, the City approved sending the Plan to all affected taxing districts and the Illinois Department of Commerce and Economic Opportunity ("DCEO"); and,

WHEREAS, this Plan will be provided to all affected taxing districts and the Illinois Department of Commerce and Economic Opportunity, by certified mail, as provided for in "Tax Increment Allocation Redevelopment Act" 65 ILCS 5/11-74.4-1 et seq., and otherwise made available for inspection as provided for by the Act.

NOW THEREFORE BE IT ORDAINED BY THE CITY COUNCIL OF THE CITY OF FAIRVIEW HEIGHTS, ILLINOIS:

SECTION 1. That the City Council of the City of Fairview Heights, Illinois hereby establishes Tuesday, June 14, 2016, at City Hall, 10025 Bunkum Road, at 6:30 p.m. as the Public Hearing date for the Ludwig Drive Tax Increment Financing Redevelopment Plan, Redevelopment Project and Redevelopment Project Area.

SECTION 2. This Ordinance shall be in full force and effect from and after its passage, approval and publication as provided by law.

READ FIRST TIME: April 5, 2016

READ SECOND TIME:

PASSED:

APPROVED:

RETURN TO AGENDA

MARK T. KUPSKY – MAYOR
CITY OF FAIRVIEW HEIGHTS

ATTEST:

KAREN J. KAUFHOLD - CITY CLERK

RETURN TO AGENDA

PROPOSED ORDINANCE NO. 19-'16

AN ORDINANCE CREATING A JOINT REVIEW BOARD FOR THE LUDWIG DRIVE REDEVELOPMENT PROJECT AREA AND SETTING INITIAL MEETING TIME AND PLACE.

WHEREAS, the City of Fairview Heights, Illinois desires to adopt tax increment financing pursuant to the Tax Increment Allocation Redevelopment Act, 65 ILCS 5/11 74.4-1 et. Seq., as amended, hereinafter referred to as the "Act"; and

WHEREAS, the City of Fairview Heights, Illinois has designated the Ludwig Drive Redevelopment Project Area, and accepted on Tuesday, April 5, 2016 a Redevelopment Plan that provides the basis for the eligibility of said Area prepared by Economic Development Resources, L.L.C.; and

WHEREAS, the Ludwig Drive Tax Increment Financing Redevelopment Plan was presented to the City Council on Tuesday, April 5, 2016, and a public hearing date for said TIF Redevelopment Plan was set for Tuesday, June 14, 2016; and

WHEREAS, pursuant to the Tax Increment Allocation Redevelopment Act, 65 ILCS 5/11 74.4-1 the City Council of the City of Fairview Heights wishes to create and convene a Joint Review Board for the purposes of reviewing the Ludwig Drive Redevelopment Project Area, Tax Increment Financing Redevelopment Plan and submitting recommendations regarding its findings to the City.

NOW, THEREFORE, BE IT ORDAINED BY THE CITY COUNCIL OF THE CITY OF FAIRVIEW HEIGHTS, ILLINOIS:

SECTION 1. A Joint Review Board consisting of a representative from City of Fairview Heights, St. Clair County, Caseyville Township, Fairview Caseyville Township Fire District, Belleville HS #201 School District, Pontiac #105 School District, City of Fairview Heights Library District, SWIC District #522, and also including a public member, is hereby created, subject to the appointment of members by the affected taxing districts.

SECTION 2. The City of Fairview Heights will convene a Joint Review Board (JRB) on Wednesday, May 11, 2016 at 11:00 am at City Hall, 10025 Bunkum Rd., Fairview Heights, Illinois. By State Statute, the establishment of this Board is necessary as the City plans to adopt the proposed Ludwig Drive Redevelopment Project Area, Tax Increment Financing Redevelopment Plan.

RETURN TO AGENDA

SECTION 3. This Ordinance shall be in full force and effect from and after its passage, approval and publication as provided by law.

READ FIRST TIME: April 5, 2016

READ SECOND TIME:

PASSED:

APPROVED:

MARK T. KUPSKY – MAYOR
CITY OF FAIRVIEW HEIGHTS

ATTEST:

KAREN J. KAUFHOLD - CITY CLERK

RETURN TO AGENDA

PROPOSED ORDINANCE NO. 20-'16

AN ORDINANCE AUTHORIZING THE ESTABLISHMENT OF THE PROPOSED TAX INCREMENT FINANCING DISTRICT "INTERESTED PARTIES" REGISTRIES AND ADOPTING REGISTRATION RULES FOR SUCH REGISTRY FOR LUDWIG DRIVE TIF.

WHEREAS, pursuant to Section § 11-74.4-4.2 of the Tax Increment Allocation Redevelopment Act, 65 ILCS § 5/11-74.4-1, et seq. (the "TIF Act"), the City of Fairview Heights ("City") is required to establish certain "interested parties" registries and adopt registration rules for such registries; and

WHEREAS, the City desires to adopt this Ordinance in order to comply with such requirements of the TIF Act.

NOW, THEREFORE BE IT ORDAINED, BY THE CITY COUNCIL OF THE CITY OF FAIRVIEW HEIGHTS ILLINOIS:

SECTION 1. The above recitals are incorporated herein and made a part hereof;

SECTION 2. The Mayor or his or her designee, is hereby authorized and directed to create an "interested parties" registry in accordance with Section § 11-74.4-4.2 of the Act for each redevelopment project area created under the Act, whether now existing or created after the date of the adoption of this ordinance;

SECTION 3. In accordance with Section § 11-74.4-4.2 of the Act, the City hereby adopts the registration rules attached hereto as "EXHIBIT A" as registration rules for each such "interested parties" registry. The Mayor shall have the authority to amend such registration rules from time to time as may be necessary or desirable to comply with and carry out the purposes intended by the Act;

SECTION 4. If any provision of this Ordinance shall be held to be invalid or unenforceable for any reason, the invalidity or unenforceability of such provision shall not affect any of the other provisions of this Ordinance;

SECTION 5. All Ordinances, Resolutions, Motions or orders in conflict with this Ordinance are hereby repealed to the extent of such conflict;

SECTION 6. This Ordinance shall be in full force and effect from and after its passage and approval as provided by law.

RETURN TO AGENDA

READ FIRST TIME: April 5, 2016

READ SECOND TIME:

PASSED:

APPROVED:

MARK T. KUPSKY – MAYOR
CITY OF FAIRVIEW HEIGHTS

ATTEST:

KAREN J. KAUFHOLD - CITY CLERK

RETURN TO AGENDA

"EXHIBIT A"

THE CITY OF FAIRVIEW HEIGHTS, ILLINOIS

TIF INTERESTED PARTIES REGISTRY REGISTRATION RULES

A. Definitions. As used in these Registration Rules, the following terms shall have the definitions set forth below.

"Act" shall mean the Tax Increment Allocation Redevelopment Act 65 ILCS § 5/11-74.4-1 et seq. As amended from time to time.

"City" shall mean City of Fairview Heights, Illinois.

"Interested Party(ies)" shall mean (a) any organization(s) active within the City (b) any resident(s) of the City, and (c) any other entity or person otherwise entitled under the Act to register in a specific Registry who has registered in such Registry and whose registration has not been terminated in accordance with these Registration Rules.

"Redevelopment Project Area" shall mean a redevelopment project area that (a) is intended to qualify (or has subsequently qualified) as a "redevelopment project area" under the Act and (ii) is subject to the "interested parties" registry requirements of the Act.

"Registration Form" shall mean the form appended to these Registration Rules or such revised form as may be approved by the City consistent with the requirements of the Act.

"Registry" or "Registries" shall mean each interested parties registry, and all such registries, collectively, established by the City pursuant to Section § 11-74.4-4.2 of the Act for the Redevelopment Project Area.

B. Establishment of Registry The City shall establish a separate interested parties registry for each Redevelopment Project Area, whether existing as of the date of the adoption of these Rules or hereafter established. The City shall establish a new registry whenever it has identified an area for study and possible designation as a Redevelopment Project Area. In any event the process of establishing the new registry must be completed prior to the deadline for sending any of the notices required by Section (J) of these rules or any other notices required by the Act with respect to the proposed Redevelopment Project Area.

C. Maintenance of Registry The Registries shall be maintained by the City Clerk or his or her designee. In the event the City determines that someone other than the City Clerk should maintain the Registries, the City may transfer the responsibility for maintaining the Registries to such other Department provided that the City (i) gives prior written notice to all Interested Parties not less than thirty (30) days prior to such transfer and (ii) publishes notice of such transfer in a newspaper of general circulation in the City.

D. Registration by Residents An individual seeking to register as an Interested Party with respect to a Redevelopment Project Area must complete and submit a Registration Form to the City Clerk. Such individual must also submit a copy of a current driver's license, lease, utility bill, financial statement or such other evidence as may be acceptable to the Clerk to establish the individual's current City residency.

E. Registration by Organizations An organization seeking to register as an Interested Party with respect to a Redevelopment Project Area must complete and submit a Registration Form to the City Clerk. Such organization must also submit a copy of a one-page statement describing the organization's current operations in the City.

F. Determination of Eligibility All individuals and organizations whose Registration Form and supporting documentation complies with these Registration Rules shall be registered in the applicable Registry within ten (10) business days of the City Clerk's receipt of all such documents. The City Clerk shall provide written notice to the registrant confirming such registration. Upon registration Interested Parties shall be

entitled to receive all notices and documents required to be delivered under these Rules or as otherwise required under the Act with respect to the applicable Redevelopment Project Area. If the City Clerk determines that a registrant's Registration Form and/or supporting documentation is incomplete or does not comply with these Registration Rules, the City Clerk shall give written notice to the registrant specifying the defect(s). The registrant shall be entitled to correct any defects and resubmit a new Registration Form and supporting documentation.

G. Renewal and Termination An Interested Party's registration shall remain effective for a period of three (3) years. At any time after such three (3) year period the City Clerk shall provide written notice by regular mail to the Interested Party stating that such registration shall terminate unless the Interested Party renews such registration within thirty (30) days of the City Clerk's mailing of written notice. To renew such registration, the Interested Party shall, within such thirty (30) day period, complete and submit the same Registration Form and supporting documentation then required of initial registrants in order to permit the City Clerk to confirm such party's residency or such organization's operations in the City. The registration of all individuals and organizations whose Registration Form and supporting documentation is submitted in a timely manner and complies with these Regulation Rules shall be renewed for an additional, consecutive three (3) year period. If the City Clerk determines that a registrant's renewal Registration Form and/or supporting documentation is incomplete or does not comply with these Registration Rules, the City Clerk shall give written notice to the registrant at the address specified in the renewal Registration Form submitted by such registrant, specifying the defect(s). The registrant shall be entitled to correct any defects and resubmit a new Registration Form and supporting documentation within thirty (30) days of receipt of the City Clerk's notice. If all defects are not corrected within thirty (30) days of the Interested Party's receipt of the City Clerk's notice, the Interested Party's registration shall be terminated. Any Interested Party whose registration is terminated shall be entitled to register again as if a first-time registrant.

H. Amendment to Registration An Interested Party may amend its registration by giving written notice to the City Clerk by certified mail of any of the following: (i) a change in address for notice purposes: (ii) in the case of organizations, a change in the name of the contact person; and (iii) a termination of registration. Upon receipt of such notice, the City Clerk shall revise the applicable Registry accordingly.

I. Registries Available for Public Inspection Each Registry shall be available for public inspection during normal City business hours. The Registry shall include the name, address and telephone number of each Interested Party and for organizations, the name and phone number of a designated contact person.

J. Notices to be Sent to Interested Parties Interested Parties shall be sent the following notices and any other notices required under the Act with respect to the applicable Redevelopment Project Area:

(i) Pursuant to sub-section § 74-4-5(a) of the Act, notice of the availability of a proposed redevelopment plan and eligibility report, including how to obtain this information, such notice shall be sent by mail within a reasonable period of time after the adoption of the ordinance fixing the public hearing for the proposed redevelopment plan;

(ii) Pursuant to sub-section § 74-4.5(a) of the Act, notice of changes to proposed redevelopment plans that do not (1) add additional parcels of property to the proposed redevelopment project area, (2) substantially affect the general land uses proposed in the redevelopment plan, (3) substantially change the nature of or extend the life of the redevelopment project, or (4) increase the number of low or very low income households to be displaced from the redevelopment project area, provided that measured from the time of creation of the redevelopment project area the total displacement of households will exceed 10; such notice shall be sent by mail not later than ten (10) days following the City's adoption by ordinance of such changes;

(iii) Pursuant to sub-section § 74-4-5 (c) of the Act, notice of amendments to previously approved redevelopment plans that do not: (1) add additional parcels of property to the redevelopment project area, (2) substantially affect the general land uses in the redevelopment plan, (3) substantially change the nature of the redevelopment project, (4) increase the total estimated redevelopment project costs set out in the redevelopment plan by more than 5% after adjustment for inflation from the date the plan was adopted, (5) add additional redevelopment project costs

RETURN TO AGENDA

to the itemized list of redevelopment project costs set out in the redevelopment plan or (6) increase the number of low or very low income households to be displaced from the redevelopment project area, provided that measured from the time of creation of the redevelopment project area the total displacement of households will exceed 10; such notice shall be sent by mail not later than 10 days following the City's adoption by ordinance of any such amendment;

(iv) Pursuant to sub-section § 74.4-5(d)(9) of the Act for redevelopment plans or projects that would result in the displacement of residents from 10 or more inhabited residential units or that contain 75 or more inhabited residential units, notice of the availability of the annual report described by sub-section § 74.4-5(d), including how to obtain the annual report; such notice shall be sent by mail within a reasonable period of time after completion of the certified audit report; and,

(v) Pursuant to sub-section § 74.4-6(e) of the Act, notice of the preliminary public meeting required under the Act for a proposed Redevelopment Project Area that will result in the displacement of 10 or more inhabited residential units or which will contain 75 or more inhabited residential units, such notice shall be sent by certified mail not less than 15 days before the date of such preliminary public meeting.

K. Non Interference These Registration Rules shall not be used to prohibit or otherwise interfere with the ability of eligible organizations and individuals to register for receipt of information to which they are entitled under the Act.

I. Amendment of Registration Rules These Registration Rules may be amended by the City subject to and consistent with the requirements of the Act.

RETURN TO AGENDA

PROPOSED ORDINANCE NO. 21-'16

AN ORDINANCE ESTABLISHING A SPECIAL TAX ALLOCATION FUND FOR THE AREA SUBJECT TO PROPOSED RESOLUTION NO. 25-'16.

WHEREAS, the statutes of the State of Illinois, more particularly those portions known as the "Tax Increment Allocation Redevelopment Act" (65 ILCS 5/11-74.4 et seq.), hereinafter referred to as the "Act", provide for the creation of "Special Tax Allocation Fund," as that term is noted in the Act; and

WHEREAS, the Act provides that monies deposited in the Special tax allocation fund must be used for the purpose of paying "redevelopment project costs," as that term is defined in the Act, and of paying obligations incurred pursuant to the Act.

NOW, THEREFORE BE IT ORDAINED, BY THE CITY COUNCIL OF THE CITY OF FAIRVIEW HEIGHTS, ILLINOIS:

SECTION 1. The City shall create a special tax allocation fund for the area which is subject to Proposed Resolution No. 25-'16. The monies placed in said account shall be used for the purpose of paying redevelopment project costs, and of paying obligations incurred pursuant to the Act, all as permitted by the Act.

SECTION 2. This Ordinance shall be in full force and effect upon its passage and approval as provided by law.

READ FIRST TIME: April 5, 2016

READ SECOND TIME:

PASSED:

APPROVED:

_____
MARK T. KUPSKY – MAYOR
CITY OF FAIRVIEW HEIGHTS

ATTEST:

_____
KAREN J. KAUFHOLD - CITY CLERK

RETURN TO AGENDA

PROPOSED ORDINANCE NO. 22-'16

AN ORDINANCE AUTHORIZING THE ESTABLISHMENT OF THE PROPOSED TAX INCREMENT FINANCING DISTRICT "INTERESTED PARTIES" REGISTRIES AND ADOPTING REGISTRATION RULES FOR SUCH REGISTRY FOR STATE ROUTE 159 NORTH TIF.

WHEREAS, pursuant to Section § 11-74.4-4.2 of the Tax Increment Allocation Redevelopment Act, 65 ILCS § 5/11-74.4-1, et seq. (the "TIF Act"), the City of Fairview Heights ("City") is required to establish certain "interested parties" registries and adopt registration rules for such registries; and

WHEREAS, the City desires to adopt this Ordinance in order to comply with such requirements of the TIF Act.

NOW THEREFORE BE IT ORDAINED, BY THE CITY COUNCIL OF THE CITY OF FAIRVIEW HEIGHTS ILLINOIS:

SECTION 1. The above recitals are incorporated herein and made a part hereof;

SECTION 2. The Mayor or his or her designee, is hereby authorized and directed to create an "interested parties" registry in accordance with Section § 11-74.4-4.2 of the Act for each redevelopment project area created under the Act, whether now existing or created after the date of the adoption of this ordinance;

SECTION 3. In accordance with Section § 11-74.4-4.2 of the Act, the City hereby adopts the registration rules attached hereto as "EXHIBIT A" as registration rules for each such "interested parties" registry. The Mayor shall have the authority to amend such registration rules from time to time as may be necessary or desirable to comply with and carry out the purposes intended by the Act;

SECTION 4. If any provision of this ordinance shall be held to be invalid or unenforceable for any reason, the invalidity or unenforceability of such provision shall not affect any of the other provisions of this ordinance;

SECTION 5. All ordinances, resolutions, motions or orders in conflict with this Ordinance are hereby repealed to the extent of such conflict;

SECTION 6. This Ordinance shall be in full force and effect upon its passage and approval as provided by law.

RETURN TO AGENDA

READ FIRST TIME: April 5, 2016

READ SECOND TIME:

PASSED:

APPROVED:

MARK T. KUPSKY – MAYOR
CITY OF FAIRVIEW HEIGHTS

ATTEST:

KAREN J. KAUFHOLD - CITY CLERK

RETURN TO AGENDA

"EXHIBIT A"

THE CITY OF FAIRVIEW HEIGHTS, ILLINOIS

TIF INTERESTED PARTIES REGISTRY REGISTRATION RULES

A. Definitions. As used in these Registration Rules, the following terms shall have the definitions set forth below.

"Act" shall mean the Tax Increment Allocation Redevelopment Act 65 ILCS § 5/11-74.4-1 et seq. As amended from time to time.

"City" shall mean City of Fairview Heights, Illinois.

"Interested Party(ies)" shall mean (a) any organization(s) active within the City (b) any resident(s) of the City, and (c) any other entity or person otherwise entitled under the Act to register in a specific Registry who has registered in such Registry and whose registration has not been terminated in accordance with these Registration Rules.

"Redevelopment Project Area" shall mean a redevelopment project area that (a) is intended to qualify (or has subsequently qualified) as a "redevelopment project area" under the Act and (ii) is subject to the "interested parties" registry requirements of the Act.

"Registration Form" shall mean the form appended to these Registration Rules or such revised form as may be approved by the City consistent with the requirements of the Act.

"Registry" or "Registries" shall mean each interested parties registry, and all such registries, collectively, established by the City pursuant to Section § 11-74.4-4.2 of the Act for the Redevelopment Project Area.

B. Establishment of Registry The City shall establish a separate interested parties registry for each Redevelopment Project Area, whether existing as of the date of the adoption of these Rules or hereafter established. The City shall establish a new registry whenever it has identified an area for study and possible designation as a Redevelopment Project Area. In any event the process of establishing the new registry must be completed prior to the deadline for sending any of the notices required by Section (J) of these rules or any other notices required by the Act with respect to the proposed Redevelopment Project Area.

C. Maintenance of Registry The Registries shall be maintained by the City Clerk or his or her designee. In the event the City determines that someone other than the City Clerk should maintain the Registries, the City may transfer the responsibility for maintaining the Registries to such other Department provided that the City (i) gives prior written notice to all Interested Parties not less than thirty (30) days prior to such transfer and (ii) publishes notice of such transfer in a newspaper of general circulation in the City.

D. Registration by Residents An individual seeking to register as an Interested Party with respect to a Redevelopment Project Area must complete and submit a Registration Form to the City Clerk. Such individual must also submit a copy of a current driver's license, lease, utility bill, financial statement or such other evidence as may be acceptable to the Clerk to establish the individual's current City residency.

E. Registration by Organizations An organization seeking to register as an Interested Party with respect to a Redevelopment Project Area must complete and submit a Registration Form to the City Clerk. Such organization must also submit a copy of a one-page statement describing the organization's current operations in the City.

F. Determination of Eligibility All individuals and organizations whose Registration Form and supporting documentation complies with these Registration Rules shall be registered in the applicable Registry within ten (10) business days of the City Clerk's receipt of all such documents. The City Clerk shall provide written notice to the registrant confirming such registration. Upon registration Interested Parties shall be

entitled to receive all notices and documents required to be delivered under these Rules or as otherwise required under the Act with respect to the applicable Redevelopment Project Area. If the City Clerk determines that a registrant's Registration Form and/or supporting documentation is incomplete or does not comply with these Registration Rules, the City Clerk shall give written notice to the registrant specifying the defect(s). The registrant shall be entitled to correct any defects and resubmit a new Registration Form and supporting documentation.

G. Renewal and Termination An Interested Party's registration shall remain effective for a period of three (3) years. At any time after such three (3) year period the City Clerk shall provide written notice by regular mail to the Interested Party stating that such registration shall terminate unless the Interested Party renews such registration within thirty (30) days of the City Clerk's mailing of written notice. To renew such registration, the Interested Party shall, within such thirty (30) day period, complete and submit the same Registration Form and supporting documentation then required of initial registrants in order to permit the City Clerk to confirm such party's residency or such organization's operations in the City. The registration of all individuals and organizations whose Registration Form and supporting documentation is submitted in a timely manner and complies with these Regulation Rules shall be renewed for an additional, consecutive three (3) year period. If the City Clerk determines that a registrant's renewal Registration Form and/or supporting documentation is incomplete or does not comply with these Registration Rules, the City Clerk shall give written notice to the registrant at the address specified in the renewal Registration Form submitted by such registrant, specifying the defect(s). The registrant shall be entitled to correct any defects and resubmit a new Registration Form and supporting documentation within thirty (30) days of receipt of the City Clerk's notice. If all defects are not corrected within thirty (30) days of the Interested Party's receipt of the City Clerk's notice, the Interested Party's registration shall be terminated. Any Interested Party whose registration is terminated shall be entitled to register again as if a first-time registrant.

H. Amendment to Registration An Interested Party may amend its registration by giving written notice to the City Clerk by certified mail of any of the following: (i) a change in address for notice purposes: (ii) in the case of organizations, a change in the name of the contact person; and (iii) a termination of registration. Upon receipt of such notice, the City Clerk shall revise the applicable Registry accordingly.

I. Registries Available for Public Inspection Each Registry shall be available for public inspection during normal City business hours. The Registry shall include the name, address and telephone number of each Interested Party and for organizations, the name and phone number of a designated contact person.

J. Notices to be Sent to Interested Parties Interested Parties shall be sent the following notices and any other notices required under the Act with respect to the applicable Redevelopment Project Area:

(i) Pursuant to sub-section § 74-4-5(a) of the Act, notice of the availability of a proposed redevelopment plan and eligibility report, including how to obtain this information, such notice shall be sent by mail within a reasonable period of time after the adoption of the ordinance fixing the public hearing for the proposed redevelopment plan;

(ii) Pursuant to sub-section § 74-4.5(a) of the Act, notice of changes to proposed redevelopment plans that do not (1) add additional parcels of property to the proposed redevelopment project area, (2) substantially affect the general land uses proposed in the redevelopment plan, (3) substantially change the nature of or extend the life of the redevelopment project, or (4) increase the number of low or very low income households to be displaced from the redevelopment project area, provided that measured from the time of creation of the redevelopment project area the total displacement of households will exceed 10; such notice shall be sent by mail not later than ten (10) days following the City's adoption by ordinance of such changes;

(iii) Pursuant to sub-section § 74-4-5 (c) of the Act, notice of amendments to previously approved redevelopment plans that do not: (1) add additional parcels of property to the redevelopment project area, (2) substantially affect the general land uses in the redevelopment plan, (3) substantially change the nature of the redevelopment project, (4) increase the total estimated redevelopment project costs set out in the redevelopment plan by more than 5% after adjustment for inflation from the date the plan was adopted, (5) add additional redevelopment project costs

RETURN TO AGENDA

to the itemized list of redevelopment project costs set out in the redevelopment plan or (6) increase the number of low or very low income households to be displaced from the redevelopment project area, provided that measured from the time of creation of the redevelopment project area the total displacement of households will exceed 10; such notice shall be sent by mail not later than 10 days following the City's adoption by ordinance of any such amendment;

(iv) Pursuant to sub-section § 74.4-5(d)(9) of the Act for redevelopment plans or projects that would result in the displacement of residents from 10 or more inhabited residential units or that contain 75 or more inhabited residential units, notice of the availability of the annual report described by sub-section § 74.4-5(d), including how to obtain the annual report; such notice shall be sent by mail within a reasonable period of time after completion of the certified audit report; and,

(v) Pursuant to sub-section § 74.4-6(e) of the Act, notice of the preliminary public meeting required under the Act for a proposed Redevelopment Project Area that will result in the displacement of 10 or more inhabited residential units or which will contain 75 or more inhabited residential units, such notice shall be sent by certified mail not less than 15 days before the date of such preliminary public meeting.

K. Non Interference These Registration Rules shall not be used to prohibit or otherwise interfere with the ability of eligible organizations and individuals to register for receipt of information to which they are entitled under the Act.

I. Amendment of Registration Rules These Registration Rules may be amended by the City subject to and consistent with the requirements of the Act.

RETURN TO AGENDA

PROPOSED ORDINANCE NO. 23-'16

AN ORDINANCE FIXING A TIME AND PLACE FOR A PUBLIC HEARING CONCERNING THE STATE ROUTE 159 NORTH REDEVELOPMENT PROJECT AREA REDEVELOPMENT PLAN.

WHEREAS, on April 5, 2016, the City placed on file with the City Clerk, for public inspection, the "State Route 159 North Redevelopment Project Area Tax Increment Financing Redevelopment Plan" (the "Plan"), dated March 24, 2016, which provides the basis for the eligibility of said area; and,

WHEREAS, the City approved sending the Plan to all affected taxing districts and the Illinois Department of Commerce and Economic Opportunity ("DCEO"); and,

WHEREAS, this Plan will be provided to all affected taxing districts and the Illinois Department of Commerce and Economic Opportunity, by certified mail, as provided for in "Tax Increment Allocation Redevelopment Act" 65 ILCS 5/11-74.4-1 et seq., and otherwise made available for inspection as provided for by the Act.

NOW, THEREFORE, BE IT ORDAINED, BY THE CITY COUNCIL OF THE CITY OF FAIRVIEW HEIGHTS, ILLINOIS:

SECTION 1. That the City Council of the City of Fairview Heights, Illinois hereby establishes Tuesday, June 14, 2016, at City Hall, 10025 Bunkum Road, at 7:00 p.m. as the Public Hearing date for the State Route 159 North Tax Increment Financing Redevelopment Plan, Redevelopment Project and Redevelopment Project Area.

SECTION 2. This Ordinance shall be in full force and effect from and after its passage, approval and publication as provided by law.

READ FIRST TIME: April 5, 2016

READ SECOND TIME:

PASSED:

APPROVED:

PUBLISHED:

RETURN TO AGENDA

MARK T. KUPSKY – MAYOR
CITY OF FAIRVIEW HEIGHTS

ATTEST:

KAREN J. KAUFHOLD - CITY CLERK

RETURN TO AGENDA

PROPOSED ORDINANCE NO. 24-'16

AN ORDINANCE CREATING A JOINT REVIEW BOARD FOR THE STATE ROUTE 159 NORTH REDEVELOPMENT PROJECT AREA AND SETTING INITIAL MEETING TIME AND PLACE.

WHEREAS, the City of Fairview Heights, Illinois desires to adopt tax increment financing pursuant to the Tax Increment Allocation Redevelopment Act, 65 ILCS 5/11 74.4-1 et. Seq., as amended, hereinafter referred to as the "Act"; and

WHEREAS, the City of Fairview Heights, Illinois has designated the State Route 159 North Redevelopment Project Area, and accepted on Tuesday, April 5, 2016 a Redevelopment Plan that provides the basis for the eligibility of said Area prepared by Economic Development Resources, L.L.C.; and

WHEREAS, the State Route 159 North Tax Increment Financing Redevelopment Plan was presented to the City Council on Tuesday, April 5, 2016, and a public hearing date for said TIF Redevelopment Plan was set for Tuesday, June 14, 2016; and

WHEREAS, pursuant to the Tax Increment Allocation Redevelopment Act, 65 ILCS 5/11 74.4-1 the City Council of the City of Fairview Heights wishes to create and convene a Joint Review Board for the purposes of reviewing the State Route 159 North Redevelopment Project Area, Tax Increment Financing Redevelopment Plan and submitting recommendations regarding its findings to the City.

NOW, THEREFORE BE IT ORDAINED, BY THE CITY COUNCIL OF THE CITY OF FAIRVIEW HEIGHTS, ILLINOIS:

SECTION 1. A Joint Review Board consisting of a representative from City of Fairview Heights, St. Clair County, Caseyville Township, Fairview Caseyville Township Fire District, Belleville HS #201 School District, Pontiac #105 School District, City of Fairview Heights Library District, SWIC District #522, and also including a public member, is hereby created, subject to the appointment of members by the affected taxing districts.

SECTION 2. The City of Fairview Heights will convene a Joint Review Board (JRB) on Wednesday, May 11, 2016 at 9:30 a.m. at City Hall, 10025 Bunkum Road, Fairview Heights, Illinois. By State Statute, the establishment of this Board is necessary as the City plans to adopt the proposed State Route 159 North Redevelopment Project Area, Tax Increment Financing Redevelopment Plan.

SECTION 3. This Ordinance shall be in full force and effect from and after its passage, approval and publication as provided by law.

RETURN TO AGENDA

READ FIRST TIME: April 5, 2016

READ SECOND TIME:

PASSED:

APPROVED:

PUBLISHED:

MARK T. KUPSKY – MAYOR
CITY OF FAIRVIEW HEIGHTS

ATTEST:

KAREN J. KAUFHOLD - CITY CLERK

RETURN TO AGENDA

PROPOSED ORDINANCE NO. 25-'16

AN ORDINANCE ESTABLISHING A SPECIAL TAX ALLOCATION FUND FOR THE AREA SUBJECT TO PROPOSED RESOLUTION NO. 26-'16.

WHEREAS, the statutes of the State of Illinois, more particularly those portions known as the "Tax Increment Allocation Redevelopment Act" (65 ILCS 5/11-74.4 et seq.), hereinafter referred to as the "Act", provide for the creation of "special tax allocation fund", as that term is noted in the Act; and

WHEREAS, the Act provides that monies deposited in the Special tax allocation fund must be used for the purpose of paying "redevelopment project costs", as that term is defined in the Act, and of paying obligations incurred pursuant to the Act.

NOW, THEREFORE BE IT ORDAINED, BY THE CITY COUNCIL OF THE CITY OF FAIRVIEW HEIGHTS, ILLINOIS:

SECTION 1. The City shall create a special tax allocation fund for the area which is subject to Proposed Resolution No. 26-'16. The monies placed in said account shall be used for the purpose of paying redevelopment project costs, and of paying obligations incurred pursuant to the Act, all as permitted by the Act.

SECTION 2. This Ordinance shall be in full force and effect upon its passage and approval as provided by law.

READ FIRST TIME: April 5, 2016

READ SECOND TIME:

PASSED:

APPROVED:

_____
MARK T. KUPSKY – MAYOR
CITY OF FAIRVIEW HEIGHTS

ATTEST:

_____
KAREN J. KAUFHOLD - CITY CLERK

RETURN TO AGENDA

PROPOSED ORDINANCE NO. 26-'16

AN ORDINANCE AUTHORIZING THE CITY TO ENTER INTO A REDEVELOPMENT AGREEMENT WITH JIM MCKAY AT 10408 LINCOLN TRAIL, FAIRVIEW HEIGHTS, IL.

WHEREAS, on February 10, 2016, the Corporate Authorities passed and approved Resolution No. 3983-2016 authorizing the approval of a Letter of Intent with Jim McKay for the City to enter into a Redevelopment Agreement with Developer for the construction of a NAPA Auto Parts Store to be located at 10408 Lincoln Trail, Fairview Heights, IL, 62208 (the "Development Project").

WHEREAS, Jim McKay has applied for benefits under the City's Business Assistance Program (Application No. 16-2) in connection with the Development Project.

WHEREAS, the proposed construction, commonly referred to as NAPA Auto Parts, Inc. with accompanying public and private infrastructure, is consistent with, and will promote the purposes outlined in the Lincoln Trail Corridor Development Standards section of the Business Assistance Program and, in order to achieve the objectives of the Lincoln Trail Corridor Development Standards the City intends to assist the developer in the development of the Project.

WHEREAS, the construction of the project will employ eight (8) persons within the City and additional Municipal Sales Tax Revenues will be generated for the benefit of the City and its residents.

WHEREAS, as a Home Rule Unit of government under the Constitution of the State of Illinois and under the Tax Increment Redevelopment Act, 65 ILCS 5/11-74.4-1 "TIF ACT." The City has the authority to enter into this agreement and to share or rebate it's TIF Revenues (as hereinafter defined) generated by the Expansion Project.

RETURN TO AGENDA

NOW, THEREFORE, BE IT ORDAINED BY THE CITY COUNCIL OF THE CITY OF FAIRVIEW HEIGHTS, ST. CLAIR COUNTY, ILLINOIS:

SECTION 1. AGREEMENT. The Mayor and the City Clerk are hereby authorized to sign and attest to the Redevelopment Agreement attached hereto as "EXHIBIT A" on behalf of the City Council.

SECTION 2. PASSAGE. This Ordinance shall be in full force and effect from and after its passage and approval as provided by law.

READ FIRST TIME: April 5, 2016

READ SECOND TIME:

PASSED:

APPROVED:

_____
MARK T. KUPSKY – MAYOR
CITY OF FAIRVIEW HEIGHTS

ATTEST:

_____
KAREN J. KAUFHOLD – CITY CLERK

"EXHIBIT A"

RETURN TO AGENDA

CITY OF FAIRVIEW HEIGHTS, ILLINOIS
REDEVELOPMENT AGREEMENT

Jim McKay d/b/a McKay NAPA Auto Parts, Inc.

Construction of a NAPA Auto Parts Store

Located at 10408 Lincoln Trail, Fairview Heights, Illinois

RETURN TO AGENDA

REDEVELOPMENT AGREEMENT

This Redevelopment Agreement (Agreement) dated as of April 19, 2016, is made by and between the City of Fairview Heights, St. Clair County, Illinois, 10025 Bunkum Road, Fairview Heights, Illinois, 62208 ("City"), and Jim McKay d/b/a McKay NAPA Auto Parts, Inc., 10408 Lincoln Trail, Fairview Heights, Illinois, 62208 ("Developer"). The City and Developer shall be referred to collectively as the Parties.

RECITALS

1. The City, as a home rule unit of government under the Constitution of the State of Illinois, possesses the authority under its home rule powers and under the Tax Increment Allocation Redevelopment Act, 65 ILCS 5/11-74.4-1 et seq. ("TIF Act"), to enter into this Agreement with the Developer in furtherance of its redevelopment plan and project to, *inter alia,* promote the health, safety, and welfare of the City's inhabitants by promoting enhancements to the local tax base and to create employment.

2. Pursuant to the TIF Act, the City Council of the City adopted the following ordinances:

(a) Ordinance No. 1379-2007, entitled "An Ordinance Approving the Tax Increment Redevelopment Plan and Redevelopment Project for the Lincoln Trail Redevelopment Project Area," which approved a redevelopment project and plan under the TIF Act; and

(b) Ordinance No. 1380-2007, entitled "An Ordinance Designating the Lincoln Trail Redevelopment Project Area," designating the Lincoln Trail Tax Increment Redevelopment Project Area, legally described therein as a redevelopment project area pursuant to the TIF Act; and

(c) Ordinance No. 1381-2007, entitled "An Ordinance Adopting Tax Increment Financing for the Lincoln Trail Redevelopment Project Area," adopting tax increment financing of "redevelopment project costs" (as defined in the TIF Act).

3. The Developer desires to undertake building construction and site improvements at 10408 Lincoln Trail, Fairview Heights, Illinois, 62208 and legally described on Exhibit A (the "Project Area"). Developer currently owns the real estate underlying the Project Area.

4. The Developer desires to undertake building construction and site improvements for a NAPA Auto Parts Store described in detail in the attached Exhibit A and made part of this Agreement (the "Project").

5. The City Council of the City has determined that (1) The Project Area is presently a blighted area within the meaning of the TIF Act, (2) the Project will be consistent with the land uses proposed by the Redevelopment Plan and will promote

the health, safety and welfare of the City's inhabitants, enhance the local tax base and create employment, and, within the Project Area, alleviate conditions of blight and conditions which, if not addressed, would become blight, and (3) assisting the Developer with the financing of certain portions of the Project that qualify as redevelopment project costs will further the objectives of the Redevelopment Plan and is, therefore, authorized under the TIF Act and the City's home rule powers.

6. By adopting Ordinance No. 1381-2007, the City Council of the City directed that certain increases in *ad valorem* real estate taxes attributable to increases in the equalized assessed value of real property within the TIF Area are to be allocated to and, when collected, paid to the City Treasurer of the City and deposited into the "Special Tax Allocation Fund for the Lincoln Trail Redevelopment Project Area" (Fund) for the purpose of paying Eligible Costs.

NOW, THEREFORE, in consideration of (1) the matters set forth in the Recitals to this Agreement, (2) the representations, warranties, covenants, and agreements set forth below, and (3) other good and valuable consideration, the receipt and sufficiency of which is hereby acknowledged, the City and the Developer agree as follows:

1. INCORPORATION OF RECITALS.

The Recitals set forth above are an integral part of this Agreement and are hereby ratified, confirmed, and incorporated as if fully set forth in this Section 1 of this Agreement.

2. REPRESENTATIONS AND WARRANTIES.

To induce the City to execute this Agreement and perform its obligations hereunder, the Developer represents and warrants to the City as follows:

(a) Developer is a duly organized and validly existing corporation organized and in good standing under the laws of the State of Illinois, authorized to do business in the State of Illinois.

(b) The documents to which the Developer is a party which pertain to the Project (Developer Documents), when executed and delivered by the Developer, will be the legal, valid and binding obligations of Developer and will be enforceable in accordance with their terms except to the extent that enforcement may be limited by any applicable bankruptcy, reorganization, insolvency, moratorium or other law or laws affecting the enforcement of creditors' rights generally or against entities such as the Developer and further subject to the availability of equitable remedies.

(c) No event has occurred and is continuing which, with the lapse of time or the giving of notice, or both, would constitute a default under the Developer Documents.

(d) No litigation or proceedings in any court, governmental body or administrative agency are pending or are threatened against the Developer which could: (i) materially adversely affect the ability of the Developer to perform his/its obligations pursuant to and as contemplated by this Agreement or under any of the Developer Documents; or (ii) materially adversely affect the operation or financial condition of the Developer;

(e) The execution, delivery, and performance by the Developer of this Agreement does not constitute or will not, upon the giving of notice or lapse of time, or both, constitute a breach or default under any other agreement to which the Developer is a party of by which the Developer or Developer's property may be bound or affected.

(f) The persons executing the Agreement and who will execute the Developer Documents on behalf of the Developer have been duly authorized by all appropriate action to enter into, execute and deliver this Agreement and the Developer Documents and perform the obligations contained herein and therein.

(g) The construction of the Project by the Developer does not now, nor in the future will, violate: (i) any statute, law, regulation, rule, ordinance or executive or judicial order of any kind (including, without limitation, zoning and building laws, ordinances, codes or approvals and environmental protection laws or regulations); or (ii) any building permit, restriction of record or any agreement affecting the Project.

The City represents and warrants to the Developer as follows:

(a) The City has authority under the City's home rule power granted in the 1970 Constitution of the State of Illinois and under the TIF Act to enter into, execute, and deliver this Agreement and perform the City's obligations pursuant to the terms contained in this Agreement.

(b) The persons executing this Agreement on behalf of the City have been duly authorized by all appropriate action into enter into, execute and deliver this Agreement.

(c) The documents to which the City is a party pertaining to this Agreement and the ordinance relating thereto (City Documents), when executed and delivered by the City, or when adopted by the City in the case of the ordinance, will be the legal, valid and binding obligations of the City enforceable in accordance with their terms, except to the extent that enforcement thereof may be limited by any applicable bankruptcy, reorganization, insolvency, moratorium or other law or laws affecting the enforcement of credits' rights generally or against entities such as the City and further subject to the availability of equitable remedies.

(d) To the City's knowledge, no event has occurred and is continuing which, with the lapse of time or the giving of notice, or both, would constitute an Event of Default by the City under the City Documents. For the purposes of this Agreement, "the City's knowledge" shall mean the actual knowledge of the Director of Economic Development (DED).

(e) No litigation or proceedings are pending in any court, governmental body or administrative agency or, to the City's knowledge, are threatened against City, which will materially adversely affect the ability of the City to perform its obligations pursuant to and as contemplated by the terms and provisions of this Agreement or the City Documents, except as provided for herein.

(f) To the City's knowledge, the execution, delivery and performance by the City of this Agreement does not constitute or will not, upon the giving of notice or lapse of time or both, constitute a reach or default under any other agreement to which City is a party or by which the City or the City's property may be bound, which will prevent performance by the City of the City's obligations under this Agreement and the City Documents.

(g) The Project Area has been designed as a part of a tax increment redevelopment project area pursuant to the TIF Act and the benefits therefrom are available to the Developer as and to the extent as set forth in this Agreement.

The Parties agree that all of the representations and warranties set forth in this Agreement are true as of the execution date of this Agreement and will be true at all times during the term of this Agreement.

3. DEVELOPMENT REQUIREMENTS, CONSTRUCTION OF PROJECT, AND MAINTENANCE OF CERTAIN PROPERTY.

(a). Responsibilities of Developer. The Developer shall construct the Project in accordance with the Business Assistance Program Application set forth in Exhibit A which has been approved by the City and the OED in accordance with the procedures described in Section 3(c) below. In addition, the Developer and any heirs and/or successors shall:

A. Invest not less than $1,590,000.00 in the Project; and

B. Create 8 FTE jobs in the first six (6) months of operation of the store; and

C. Create sales after the first year of operation (according to the date of issuance of occupancy permit) generating not less than $900,000.00 in sales annually and continue to generate not less than $900,000.00 in sales annually for the next five (5) years; and

D. Developer, heirs, and successors agree to remain open as an auto parts store at 10408 Lincoln Trail, Fairview Heights, Illinois for not less than five (5) years beyond the Project Completion Date; and

E. Developer shall comply with all existing and applicable Federal, State, County, and Local laws and ordinances, including, but not limited to, those which establish the applicable prevailing wage to be paid by Developer to workers on the Project. Developer, like the City, acknowledges the value of trade unions in construction projects, as demonstrated by the passage of Resolution No. 3887-2015, and agrees that 100% of Developer's labor will be provided by contractors using labor provided by participating member trade unions affiliated with the Southwestern Illinois Building and Trades Council; and

F. Developer agrees to reimburse the City for all public funds abated and/or provided pursuant to this Agreement in the event that it fails to meet the obligations set forth in this Agreement, and agrees that said reimbursement or payment reduction will be made pursuant to the formula described in Exhibit C; and

G. Developer agrees to complete and return annually a Development Agreement Reporting Form attached as Exhibit B; and

H. Agree to construct the building and site in conjunction with its BAP Application 2-16 and consistent with the twelve (12) Lincoln Trail Corridor Development Standards Exhibit D.

I. At all times comply with all existing and applicable Federal, State, County, and Local Laws and ordinances; and

J. Obtain and maintain all insurance coverages required by Section 37-4-1 of the Revised Code of Ordinances of Fairview Heights, Illinois, and name the City of Fairview Heights as an additional insured on the policies of insurance specified therein, as set forth in Section 5(c) to this Agreement; and

K. Agree to submit site Plan/Construction Drawings suitable for issuance of a building permit; and

L. Allow the City to place temporary signage on the Project Area during construction indicating that the Project received financial assistance from the City; and

M. Issue at least fourteen (14) days written notice to the City that the payment(s) required of the City to Developer pursuant to Section 4(a) is/are due.

(b). Commencement and Completion Date. The Developer shall commence construction on or before May 23, 2016 and shall complete the Project on or before December 31, 2016 (Project Completion Date). The completion date may be extended for up to an additional three (3) months if Developer has not

completed the Project despite due diligence in prosecution of construction activities, provided that (i) Developer promptly furnishes the City with written notice specifying the reasons for the delay, the expected length of delay, and (ii) Developer uses all reasonable efforts to minimize the delay.

(c). Plans and Specifications. The Project shall conform to Project Description set forth in Exhibit A. No material deviation from the building permit shall be made by Developer without the prior written consent of the DED and other applicable Departments of the City, which consent shall not be unreasonably withheld or delayed, provided nothing shall impact the City's right to withhold consent in accordance with its standard practices and procedures.

The Project and Development Plan shall conform to the terms of this Agreement and all applicable federal, state, and local statues, laws, ordinances and regulations. Developer shall comply with all federal, state and municipal laws and ordinances concerning the rights of accessibility for the physically disabled, including, without limitation, the Americans with Disabilities Act, 42 U.S.C. 12101 *et seq.* (1990), and the Environmental Barriers Act of Illinois, 410 ILCS *25/1 et seq.* (1992) as the same are amended form time to time.

Upon receipt of proposed changes to the Project or Development Plan, the DED shall have fifteen (15) days in which to approve or to reject the same by written notice to the Developer. Such approval shall be subject to the City's customary review standards and shall not be unreasonably withheld or delayed. In the event the DED does not approve the revised plan(s), the DED shall specify in detail the reasons therefore. Developer shall have reasonable time within which to submit revised plans to the DED for his or her approval, which approval shall not be unreasonably withheld or delayed. If the DED fails to approve or reject (specifying reasonable details therefore) a submission or re-submission by the Developer within fifteen (15) days of the DED's receipt of same, then the DED will be deemed to have approved such submission or re-submission.

(d). Limited Applicability of DED Approval. Any approvals of the Project or Development Plans by the DED are for the purposes of this Agreement only and do not affect or constitute approvals required for building permits or approvals required pursuant to any other ordinance, resolution, or other requirement of the City and such approval does not constitute approval or endorsement of the quality, structural soundness, safety or economic feasibility of the Project.

(e). Constructing the Project. Prior to commencement of the Project pursuant to this Agreement, Developer shall deliver the following to the DED:

(i) The general contractor's sworn statement setting forth all then existing contracts and all of the projected and anticipated costs of the Project;

(ii) A description of Developer's financing sources (Financing) that confirms adequate financing for the Project including what proportion of the funds, if

any, shall be Developer's equity capital and evidence of the availability thereof. If any portion of the funds will be borrowed, Developer shall furnish a commitment for a conventional construction loan from an institutional lender or from Developer's parent corporation providing adequate financing, identifying, among other things, the lender the amount of the loan, length of the term and the applicable interest rate (Commitment). The terms of the Commitment and other financing shall be subject to the reasonable approval of the City with respect to the adequacy of the Financing and Developer's equity to assure that funds will be readily available to support the costs of the Project including all Development Requirements and other non-construction costs;

(iii) The contract between Developer and the General Contractor for the construction of the Project; and

(iv) A copy of the application for the building permit with regard to the construction of the Project showing all fees paid.

Provided that the Commitment is approved by the City, an independent institutional lender shall be permitted to secure its loan by a mortgage (First Mortgage) encumbering the Project. The terms of any construction loan agreement and the documents which evidence and secure the Financing shall be subject to the reasonable approval of City, which approval shall not be unreasonably withheld or delayed.

(f). Relocation of Utilities. Any relocation, repair, or replacement of any existing City power, communications, or other utilities lines in and under the Project or the public streets or private property owned by Developer or adjacent to the Project shall be relocated, repaired, or replaced by the Developer at its sole cost and in accordance with the City's standard specifications.

(g). Certificate of Completion. Upon completion of the Project in accordance with the provisions contained in this Agreement and commencement of business, the DED, upon written request by Developer, shall furnish a Certificate of Completion (Certificate) to the Developer. The Certificate shall be a conclusive determination of satisfaction and termination of the covenants in this Agreement with respect to the obligations of Developer. The Certificate shall not constitute evidence that Developer has complied with applicable provisions of federal, state and local laws, ordinance and regulations with respect to the construction of the Project. The Certificate shall be in recordable form.

Upon written request by Developer for the Certificate, the DED, within thirty (30) days after receipt of the same, shall undertake an inspection of such Project and thereafter provider Developer either with a Certificate or a written statement indicating in adequate detail how Developer has failed to complete the Project in conformity with this Agreement, or is otherwise in default, and what measures or acts will be necessary, in the reasonable opinion of the DED, for

Developer to perform as a condition to receipt of a Certificate. Developer shall have sixty (60) days to correct any such nonconformity or default. Upon compliance with DED requirements, Developer shall resubmit a written request for a Certificate from the DED. The furnishing of such Certificate to Developer shall not be unreasonably withheld or delayed.

(h). Mortgagees Not Obligated to Construct. Notwithstanding any other provision of this Agreement, the institutional holder of any mortgage or its affiliate authorized by the Agreement shall not be obligated by the provisions of this Agreement to complete the Development Requirements and the construction of the Project or to guarantee such construction or completion. Nothing in this paragraph or any other paragraph of this Agreement shall be deemed or construed to permit or authorize any such holder or its affiliate to develop or use the Project or any part thereof for any use or to construct any improvements other than the Project as provided for or permitted in this Agreement.

Whenever the City shall deliver a notice or demand with respect to any breach or default by the Developer of its obligations under this Agreement, the City shall at the same time forward a copy of such notice or demand to any institutional mortgagee whose address has been given in writing to the City and the DED. After any such default by the Developer, each institutional mortgagee shall have the right but not the obligation to remedy such default within reasonable time following receipt of notice by such mortgagee.

Whenever the mortgagee shall deliver a notice or demand to the Developer with respect to any breach or default by the Developer of its obligations under the applicable mortgage loan documents, the mortgagee shall at the same time forward a copy of such notice or demand to the City at the addresses listed in this Agreement. After any such default by the Developer, the City has the right, but not the obligation, to remedy such default within a reasonable time following receipt of such notice.

4. FINANCING REQUIREMENTS AND CITY ASSISTANCE.

(a). Reimbursement for Redevelopment Project Costs. Provided Developer substantially performs all of its obligations under this Agreement and furnishes the City with a certified cost analysis, certified by the independent architect and the chief financial officer of the Developer, setting forth all redevelopment project costs (as defined in the TIF Act) for the Project on or before December 31, 2016, the City shall reimburse the Developer for certain "Qualified Redevelopment Project Costs" to the extent provided below. The City shall:

Provide funds to Developer in the amount of $25,000.00 after six (6) months of operation, on or before June 30, 2017; provide an additional $25,000.00 after the first year of operation, on or before December 31, 2017; and final funding in the amount of $25,000.00 after the second year of operation, on or before December

31, 2018 for a total City financial participation and assistance not to exceed $75,000.00.

Reimbursement shall be conditioned upon the Developer submitting to the City receipts or other proof that it incurred Qualified Redevelopment Project Costs. The Developer shall seek reimbursement in writing pursuant to Sections 3(a)(L) and 8(j) of this Agreement.

(b). Source of Reimbursement. The City shall make any payments due to Developer under this Agreement solely from the TIF No. 3 Fund. The provisions of this Agreement, including any pledges of tax revenues, are subject to the provision of any pledges of particular portions of incremental taxes deposited from time to time into the Fund, which pledges were made prior to the execution and delivery of this Agreement. This obligation is not a general obligation of the City.

(c). Maximum Reimbursement. The City shall remit to the Developer the requested TIF incremental reimbursements set forth above, but not to exceed a total reimbursement of Seventy-Five Thousand Dollars ($75,000.00).

(d). Sales Tax Abatement. The City shall authorize Developer to receive a Sales Tax Abatement (Sales Tax Exemption Certificate), subject to the approval of the Illinois Department of Revenue, for building materials through the City's Enterprise Zone.

5. DEVELOPER'S COVENANTS.

(a). Use Restrictions. Equal Opportunity Laws and Covenants Running with the Land. The Developer covenants and agrees as follows:

(i) The Project Area shall be utilized solely for construction of improvements to be used in accordance with the Site Plan, the terms and provision of this Agreement, the commitment, and all applicable state and local laws, ordinances, and regulations.

(ii) Neither Developer nor any of its contractors, subcontractors, or material supplies shall discriminate based upon race, color, religion, sex, national origin or ancestry, age, handicap or disability, sexual orientation, military status, parental status, or source of income in the construction of the Project and shall comply with any and all federal, state and local laws, statutes, ordinances, or regulations with regard to non-discrimination in the construction of the Project. The general construction contract for the acquisition, construction, improvement and equipping of the Project, all subcontracts, and all contracts of the operation of all or any part of the Project by persons other than the Developer shall contain requirements to this effect.

(b). Developer's Indemnity.

Developer shall indemnify, defend, and hold harmless the City (including without limitation any person at any time serving as a member, officer, agent or employee of the City) against and from any and all losses, claims, damage, penalties, expenses or liabilities of any nature (including reasonable attorneys' fees and court costs) suffered or incurred by City, or any person, firm, corporation or other legal entity, arising from the conduct or management of, or from any work or thing done on, the Project during the term of this Agreement, including without limitation:

(i) Any condition of the Project or the Project Area, including without limitation any environmental condition;

(ii) Any breach or default on the part of the Developer in the performance of any of its obligations under this Agreement not due to any act of neglect or default under this Agreement by the City;

(iii) Any failure of the Developer or any contractor to pay contractors, subcontractors or material men;

(iv) Any material misrepresentation or omission in the Developer's documentation to City to participate as the Developer of the Project which is the result of information supplied or omitted by the Developer or by agents, employees, contractors or persons acting under the control or at the request of the Developer;

(v) Any failure of the Developer to redress any misrepresentations or omissions in this Agreement or any other agreement relating hereto;

(vi) Any act or negligence of the Developer or of any of its agents, contractors, servants, employees or licensees;

(vii) Any act or negligence of any assignee or lessee of the Developer, or of any agents, contractors, servants, employees or licensees of any assignee or lessee of the Developer; and

(viii) Any claim, cost or damage with regard to the use or misuse of the Project by the Developer.

The Developer shall indemnify and save the City, including without limitation any person at any time serving as a member, officer, agent or employee of the City, harmless from any such claim arising in such manner, or in connection with any action or proceeding brought thereon, and upon notice from the City, the Developer shall defend them in any such action or proceeding.

Developer further covenants to indemnify and save the City and its members, officers, agent and employees (past, present and future) harmless from any loss, claim, damage, tax, penalty or liability of any nature due to any and all suits, actions, legal or administrative proceedings, or claims arising or resulting from, or in any way connected with any act, failure to act, omission or misrepresentation by any person in connection with the issuance, sale, delivery, or remarketing of any securities issued in connection with the Project provided, that the indemnification provided in this sentence shall not extend to material inaccuracies, material misstatements or material omissions in information specifically provided by the City in writing for inclusion in any official statement or other disclosure document.

(c). Developer's Insurance.

The Developer, at its sole cost and expense, shall procure and maintain the following insurance provided by insurance companies acceptable to the City and authorized to transact business under the laws of the State of Illinois, as required under the Revised Code of Ordinances of Fairview Heights, Illinois, Chapter 37, Article 4, Section 1, and agrees to abide by the terms and conditions set forth therein:

(i) Commercial General Liability Insurance (CGL) providing for coverage equivalent to the Insurance Services Office Commercial General Liability Coverage Form No. CG 0001 12 07. Required liability insurance coverage shall be written in the occurrence form and shall provide coverage for operations of the Developer, operations of subcontractors (contingent or protective liability); completed operations; broad form property damage and hazards of explosion, collapse and underground; and contractual liability. The General Aggregate Limit shall be endorsed on a per project basis with coverage of at least Two Million Dollars ($2,000,000.00) per occurrence. The CGL policy shall have a projects-completed operations aggregate limit of Two Million Dollars ($2,000,000.00) and an each occurrence limit of One Million Dollars ($1,000,000.00).

(ii) Commercial Automobile Liability. The policy shall cover owned, non-owned, and hired vehicles. The Commercial Automobile Liability policy shall provide a Bodily Injury & Property Damage Liability Limit of One Million Dollars ($1,000,000.00), per each occurrence.

(iii) Employers Liability Coverage, providing for coverage of at least Five Hundred Thousand Dollars ($500,000.00) for each accident. The Employers Liability Coverage policy shall have a disease policy limit of Five Hundred Thousand Dollars ($500,000.00) and a disease - each employee limit of Five Hundred Thousand Dollars ($500,000.00).

(iv) Umbrella Liability. Any policy shall provide excess limits over and above the other insurance limits stated herein. The Developer may purchase insurance for the full limits required or by a combination of primary policies for lesser limits and remaining limits provided by the umbrella policy.

The Developer further agrees that, at the Developer's sole cost, the CGL policy shall provide by an endorsement in the appropriate manner and form that the City of Fairview Heights, Illinois, its officers and employees shall be named as additional insureds with respect to the policies and any umbrella excess liability coverage for occurrences arising in whole or in part out of the Project and operations performed.

All insurance shall remain in force during the period covering occurrences happening on or after the effective date and remain in effect during performance of the Work and all times thereafter when the Developer may be correcting, removing, or replacing defective work until notification of the date of final inspection. Termination or refusal to renew shall not be made without thirty (30) days prior written notice to the City by the insurer and the policies shall be endorsed so as to remove any language restriction or limiting liability concerning this obligation.

Certified copies of the original policies or certificate(s) of insurance by the insurer(s) issuing the policies and endorsements setting forth the coverage, limits and endorsements shall be filed with the City Clerk before the City will execute this Agreement. A certificate of insurance shall include a statement that the coverage and limits conform to the minimums required by this Section. Any exception or deviation shall be brought to the attention of the City for a ruling of acceptability. In no event shall any failure of the City to receive policies or certificates or to demand receipt be construed as a waiver of the Developer's obligation to obtain and keep in force the required insurance.

All costs for insurance as specified herein will be considered as included in the cost of this Agreement. The Developer shall, at its expense and risk of delay, cease operations if the insurance required is terminated or reduced below the required amounts of coverage. Developer in the minimum amounts set forth herein shall not be construed to relieve the Developer form its obligation to indemnify in excess of the coverage in accordance with this Agreement.

6. PERFORMANCE

(a). Time is of the Essence.

Time is of the essence of this Agreement.

(b). Permitted Delays.

Neither the City nor the Developer shall be considered in breach of obligations with respect to the commencement and completion of the Development requirements in the event of delay in the performance of such obligations due to unforeseeable causes beyond such party's control and without such party's fault or negligence including, but not limited to, any delays or halts in the construction of the Project which are compelled by court order, acts of God, acts of the public enemy, acts of the United States or any state government or authority, acts of the other part, fires, floods, epidemics, quarantine restrictions, strikes, embargoes and severe weather or delays of subcontractors due to any such causes. The time for the performance of the obligations shall be extended for the period of the enforced delay if the City or the Developer, as the case may be, seeking the extension shall notify in writing the other party within twenty (20) days after the beginning of any such delay and such party utilizes diligence in attempting to complete performance of its obligations.

(c). Breach; Remedies.

Except as otherwise provided in this Agreement, in case of an Event of Default, upon written notice from the non-defaulting party, the party in default shall proceed to cure or remedy such default immediately and, in any event, shall complete such cure or remedy not later than twenty (20) days after receipt of such notice (unless a longer period is provided in Section 6(d)).

In the event that the Event of Default is not cured within the applicable time period, the non-defaulting party may institute such proceedings at law or in equity as may be necessary or desirable in its sole discretion to cure and remedy the default including, but not limited to, proceedings to compel specific performance of the defaulting party's obligations.

(d). Event of Default.

For purposes of the Agreement, the occurrence of any one or more of the following shall constitute an "Event of Default":

(i) If any warranty or representation made or furnished by the City or by the Developer (including, without limitation, the representations and warranties of the Developer described in Section 2), was not true and correct at the time made.

(ii) If the City or the Developer is in breach of any material provisions of this Agreement or any other agreement between the City and the Developer.

(iii) If any petition is filed by or against City or the Developer under the Federal Bankruptcy Code or any similar state or federal law,

whether now or hereinafter existing, provided that, in the case of an involuntary proceedings, such petition is not vacated, stayed or set side within ninety (90) days after filing.

(iv) If the Developer defaults in fulfilling its obligations with respect to the completion of the Site Plan or abandons or substantially suspends construction work, or violates any other provision of this Agreement not otherwise specified in this Section 6(d), provided that any such default, violation, or abandonment or suspension shall not be cured, ended, or remedied within twenty (20) days of 15 the date the Developer receives written demand by City to cure such default, or such longer period to be determined by City in its sole discretion if the default cannot be reasonably cured within the twenty (20) day period, provided that the cure has been commenced by the Developer within said twenty (20) day period and thereafter diligently prosecuted to completion.

(v) If City fails to fulfill its obligations set forth in Section 4; or

(vi) If the Developer fails to comply with the use, occupancy and accessibility covenants affecting the Property described in Section 3 above; or

(vii) If the Developer fails to comply with the non-discrimination covenants described in Section 5 and the Affirmative Action Obligations set forth in Section 7; or

(viii) Failure of the Developer to pay real estate taxes or special assessments affecting the Project when due, or placing thereon any encumbrance or lien other than Financing or suffering any levy or attachment to be made, or any materialman's or mechanics' lien, or any other unauthorized encumbrance or lien to attach to the Project or any part thereof, and such taxes or assessments shall not have been paid, or the encumbrance or lien removed or discharged or provision satisfactory to the City made for such payment, removal or discharge within twenty (20) days after written demand by City to remove such lien or encumbrance; or

(ix) The Developer makes any assignment, pledge, encumbrance, transfer or other disposition as prohibited by this Agreement; or

(x) If either City or the Developer defaults in performance of any of its other obligations under this Agreement and does not cure the same within twenty (20) days of written notice from the other party; or

(xi) The Developer allows the conduct of general business operations at the Project Area to cease within seven (7) years of the project Completion Date.

(e). Prior to Issuance of Certificate.

If prior to the time the City issues its Certificate of Completion Developer shall default in any specific manner as described in Section 6(d), then City may, upon written notice to Developer and the failure of Developer to cure such default within the applicable cure period, terminate this Agreement. In the event of termination, the City shall be excused from performance of any further obligations under this Agreement, shall be entitled to repayment of any and all amounts reimbursed to the Developer under this Agreement, as well as any rights available against Developer at law or in equity, including, without limitation, a suit for injunctive relief or specific performance and/or direct and consequential damages.

(f). After Issuance of a Certificate.

If after the date on which the City issues its Certificate of Completion Developer defaults in any specific manner as described in Section 6(d), including but not limited to, Section 6(d)(ix), the City shall be excused from performance of any further obligations under this Agreement, entitled to the repayment of any and all amounts reimbursed to the Developer under this Agreement, and any rights available against Developer at law or in equity, including, without limitation, a suit for direct and consequential damages.

(g). Waiver and Estoppel.

Any delay by City in instituting or prosecuting any actions or proceedings or otherwise asserting its rights shall not operate as a wavier of such rights or operate to deprive City of or limit such rights in any way. No waiver made by City with respect to any specific default by Developer shall be construed, considered or treated as a waiver of the rights of City with respect to any other defaults of Developer.

(h). Access to the Project.

Any duly authorized representative of the City shall, at all reasonable times, have access to the Project for the purposes of confirming the Developer's compliance with this Agreement.

(i). City's Right to Inspect Records.

Until the City issues its Certificate of Completion, the City shall have the right and authority to review and audit, from time to time, the Developer's

financial books and records relating to the Project and the Development Requirements including, without limitation, the Developer's loan statements, general contractor's sworn statements, general contracts, subcontractors, purchase orders, waivers of lien, paid receipts, and invoices. Upon reasonable notice which shall not be less than (30) days, all such books and other records shall be available at the offices of the Developer for inspection, audit and examination at all reasonable times by any duly authorized representative of the City.

7. NON-DISCRIMINATION.

Developer shall not discriminate against any employee or applicant for employment based upon race religion, color, sex, national origin or ancestry, age, handicap or disability, sexual orientation, military status, parental status or source of income.

All construction workers covered by this Agreement shall mean skilled construction workers, which include all worksite (working) foremen, journeymen, apprentices, trainees and helpers, where applicable.

Developer, in all solicitations or advertisements for employees placed by or on behalf of Developer, shall state that all qualified applicants shall receive consideration for employment without discrimination based upon race, religion, color, sex, national origin or ancestry, military status, parental status, sexual orientation, source of income, age, handicap or disability.

Developer shall include such provisions in every contract and shall require inclusion of these provisions in every subcontract and sub-subcontract entered into by its General Contractor so that each provision shall be binding upon the General Contractor and each subcontractor and each sub-subcontractor, as the case may be.

8. MISCELLANEOUS PROVISIONS.

(a). Entire Agreement.

Except as otherwise provided herein, this Agreement contains the entire agreement of the parties with respect to the Project and the Development Plans and supersedes all prior agreements, negotiations, and discussions with respect thereto, and shall not be modified, amended or changed in any material manner whatsoever except by the written agreement of the City and the Developer. The term "material" for the purposes of this Section 8(a) shall be defined as any deviation from the terms of this Agreement which operates to cancel or otherwise reduce any developmental, construction or job-creating obligation of the Developer by more than ten (10) percent, substantially changes the character of the Development Requirements or any activities undertaken by the Developer affecting the Development Requirements, or increases any time agreed for the

performance by City or the Developer by more than one hundred eighty (180) days.

(b). Assignability and Transfer.

Unless expressly permitted by the provisions of this Agreement, the Developer, until City issues the Certificate with respect to the Project, shall not assign, transfer or convey any right, title or interest in the Property or any of its duties or obligations under this Agreement as they relate to the Development Requirements or the land. Notwithstanding anything to the contrary herein, the Developer may assign this Agreement without the consent of City (but without release of the Developer from its obligations under this Agreement) to:

- Its parent company; or
- Any company which merges, consolidates or acquires substantially all of the assets of Developer, including the Project Area as a going concern; or
- An entity in which the Developer has a controlling interest of 51 % or more.

(c). Conflict of Interest - City's Representatives Not Individually Liable.

Developer covenants that, prior to the issuance of any Certificate of Completion by the City, no member of any city board, commission or agency, or official or employee of the City shall have any proprietary interest, direct or indirect, in the Developer, this Agreement, or the Development Requirements, nor shall any such member, official or employee participate in any decision relating to this Agreement which affects his or her personal interest or the interest of any corporation, partnership, or association in which he or she is directly or indirectly interested. No member, official, or employee of the City shall be personally liable to the Developer to perform any commitment or obligation of the City under this Agreement nor shall any such person be personally liable in the event of any default or breach by the City.

(d). Survival.

All representations and warranties contained in this Agreement are made as of the execution, delivery and acceptance hereof by City and the Developer and shall survive the execution, delivery and acceptance of this Agreement.

(e). Mutual Assistance.

The City and the Developer agree to perform their respective obligations, including the execution and delivery of any documents, instruments, petitions,

and certification, as may be necessary or appropriate, consistent with the terms and provisions of this Agreement.

(f). Cumulative Remedies.

The remedies of either party hereunder are cumulative and the exercise of anyone or more of the remedies provided by this Agreement shall not be construed as a waiver of any of the other remedies of such party unless specifically so provided herein.

(g). Limited Obligation.

The obligations of the City under this Agreement shall never constitute an indebtedness or a general obligation of the City within the meaning of the1970 Constitution of the State of Illinois or any statutory provisions and shall not constitute or give rise to a charge or lien against City's general credit or taxing power.

(h). Disclaimer.

No provision of this Agreement, nor any act of the City or the Developer, shall be deemed or construed by the City and the Developer, or by third persons, to create any relationship of third-party beneficiary, or of principal or agent, or of limited or general partnership, or of joint venture, or of any association or any other relationship involving City.

(i). DED's Authority.

The DED shall have authority to approve non-material changes to the Development Requirements and Plans and Specs and to waive nonmaterial deviations with respect to the requirements of this Agreement. No approvals or waivers shall be effective unless the same are in writing.

(j). Notices.

All notices to be served pursuant hereto shall be deemed properly delivered if delivered personally or by Federal Express or comparable "over night" courier service (which shall be deemed received on the date of delivery thereof), or served by United States certified or registered mail, postage prepaid (which shall be deemed received on the third (3rd) business day following the postmark date thereof), to the City or the Developer at the addresses set forth below or to such other addresses as City or the Developer may direct in writing:

If to the City: Mike Malloy
Director of Economic Development
10025 Bunkum Road
Fairview Heights, IL 62208

If to the Developer: Steven Giger
Perfect Finish, Inc.
10610 Lincoln Trail
Fairview Heights, Illinois 62208

(k). Headings.

The headings of the various sections and subsections of this Agreement have been inserted for convenient reference only and shall not in any manner be construed as modifying, amending, or affecting in any way the express terms and provisions hereof.

(l). Governing Law.

This Agreement shall be governed by and construed in accordance with the internal laws of the State of Illinois without regard for the conflict of laws provisions of such law or of the law of any other jurisdiction.

(m). Recordation of Agreement.

Without the express written consent of City, neither this Agreement nor any memorandum hereof shall be recorded in the Office of the Recorder of Deeds of St. Clair County, Illinois.

(n). Successors and Assigns.

The terms of this Agreement shall be binding upon City and the Developer and the Developer's legal representatives, successors and assigns. No contractor, subcontractor, material vendor, or laborer shall be deemed a third-party beneficiary of this Agreement.

(o). Counterparts.

Any number of counterparts of this Agreement may be signed on behalf of the City and the Developer, which counterparts, when fully executed, shall constitute but on and the same agreement.

(p). Severability.

It is understood and agreed by the parties hereto that if any part, term, or provision of this Agreement is held by a court of law to be illegal or in conflict with any law of the State of Illinois, the validity of the remaining portions or provisions

shall not be affected, and the rights and obligations of the parties shall be construed and enforced as if the Agreement did not contain the particular part, term or provisions held to be invalid.

IN WITNESS WHEREOF, the parties have executed or caused this Agreement to be executed, all as of the date first written above.

CITY OF FAIRVIEW HEIGHTS, ST. CLAIR COUNTY, ILLINOIS, a municipal corporation

By: _____
Mayor Mark T. Kupsky
Mayor, City of Fairview Heights

JIM McKAY and
McKAY NAPA AUTO PARTS, INC.

By: _____
Jim McKay

By: _____
McKay NAPA Auto Parts, Inc.

Title: _____

STATE OF ILLINOIS)
) ss
COUNTY OF ST.CLAIR)

I,_____, a notary public in and for said County, in the State aforesaid, do hereby certify that Mark T. Kupsky personally known to me to be the Mayor of the City of Fairview Heights, St. Clair County, Illinois, a municipal corporation, and personally known to me to be the same person whose name is subscribed to the foregoing instrument, appeared before me this day in person and being first duly sworn by me acknowledged that as such Mayor, he signed and delivered the said instrument, pursuant to authority given by the City of Fairview Heights, as a free and voluntary act and as the free and voluntary act and deed of said City, for the uses and purposes therein set forth.

Given under my hand and notarial seal this 19th day of April, 2016.

_____
Notary Public

My Commission Expires:

_____

RETURN TO AGENDA

STATE OF ILLINOIS)
) ss
COUNTY OF ST.CLAIR)

I, _____, a notary public in and for said County, in the State aforesaid, do hereby certify that Jim McKay, personally known to me to be the authorized representative of McKay NAPA Auto Parts, Inc. located at 10408 in Fairview Heights, Illinois, and personally known to me to be the same person whose name is subscribed to the foregoing instrument, appeared before me this day in person and being first duly sworn by me acknowledged that as such representative, he signed and delivered the said instrument, pursuant to authority given by said corporation, as his free and voluntary act and as the free and voluntary act and deed of said corporation, for the uses and purposes therein set forth.

Given under my hand and notarial seal this 19th day of April, 2016.

_____
Notary Public

My Commission Expires:

_____

RETURN TO AGENDA

Exhibit A
Business Assistance
Program Application

RETURN TO AGENDA

APPENDIX 1

Application #: 2-6

Business Assistance Program Application

Applicant Information

1. Name of Person Completing Application: JAMES McKAY
2. Address: 911 MILLER DR STAUNTON IL 62088
3. Phone Number: 217-556-6300
4. Fax Number: 217 324-6385
5. Email: JMCKAY@MCKAYAUTO.NET

Business Information

1. Business Name: McKAY NAPA AUTO PARTS INC
2. Owner: MCKAY AUTOPARTS INC EARL BLACK PRES
   a. Representative of owner: JAMES McKAY
   b. Does Representative have a financial interest in the project? (Yes) No
   c. If yes, what is the percentage level of participation? 33 1/3 %
3. State of Organization: ILLINOIS
4. Address: 414 N. OLD RT 66 LITCHFIELD IL 62056
5. Phone Number: 217 324 3971
6. Fax Number: 217 324 6385
7. Email: JMCKAY@MCKAYAUTO.NET
8. Type of Business Entity: AUTO PARTS STORE

RETURN TO AGENDA

Project Costs

1. Estimated Total Project Cost: complete the following worksheet

Remodeling/Rehabilitation/Expansion (TOTAL):	$
Labor	$
Materials	$
New Construction (TOTAL):	$ 750.000 to 825.000 EST
Labor	$ 350,000 to 400,000 EST
Materials	$ 350.000 to 400000 EST
Capital Equipment:	$ 75,000 to 100,000 EST
Site Improvements (Acquisition/Preparation, etc.):	$ 25.000 to 50000 EST
Other: SITE PREP ENV.	$ 40.000 APROX.
TOTAL ESTIMATED PROJECT COST:	$ [illegible] JMC

* Attach evidence (such as commitment letters or terms sheets) evidencing that the portion of the project funded by private investment will be financed, as well as the source of the funding.

Public Benefits

Provide the Property Identification Number (PIN) for each parcel of property comprising the proposed project area, as well as the current equalized assessed value (EAV) and property taxes as stated on the most recent tax bill for each parcel. Please provide an estimated projection of the EAV and taxes resulting from the project.

PIN	EAV	TAXES	Projected EAV	Projected TAXES
				JMC

Existing sales subject to sales tax: _____

Proposed sales subject to sales tax: _____ JMC

Existing number of FTE jobs: _____

Proposed number of FTE jobs: _____ JMC

Indicate the total amount of financial assistance requested (in current dollars): $ [illegible] .00 JMC

* Attach data supporting the financial feasibility of the project, the projected performance outcomes of the requested financial assistance, or any professional studies or reports supporting the viability of the project.

Describe the public benefits that will be realized by the completion of this project. Examples of public benefits include, but are not limited to, creation of affordable housing, creation of new permanent jobs, creation of new retail choices in an underserved neighborhood, rehabilitation of a historic building, catalyst for new private investment in a neighborhood, re-occupancy of a vacant building, elimination of blight, incorporation of environmentally-friendly features, job training opportunities (attach additional sheets if necessary):

NEW JOBS TO THE COMMUNITY, MORE TAX MONEY, NEW BUILDING FOR AN EMPTY CITY LOT, NEW SOURCE FOR QUALITY AUTO PARTS,

RETURN TO AGENDA

Project Information

Provide the Street Address of the project: 10403 [illegible] Trail / [illegible] JMC

1. Is project located in
   - X Lincoln Trail Tax Increment Finance District (See Map Exhibit A)
   - _ Fairview Heights Tax Increment Finance District (See Map Exhibit B)
   - _ St. Clair Square Shoppes Tax Increment Finance (See Map Exhibit C)
   - _ St. Clair Square Shoppes Business District (See Map Exhibit C)
   - _ City of Fairview Heights (See Map Exhibit D)
   - X Lincoln Trail Corridor portion of Lincoln Trail Tax Increment Finance District (see map exhibit E)

2. Have you completed an application for Site Plan Review (Appendix 2)?

   _ YES X NO

   If Yes, attach a copy of your completed Site Plan Review application, ***including copies of any Site Development Plans, Maps, or any other supporting documentation***. If No, contact the Director of Land Use, Planning, and Development to obtain and complete all necessary applications.

3. What is the current zoning classification of the property? [illegible]

   Will the proposed project require a zoning amendment, variance, or special use permit? NO JMC

   If Yes, provide application numbers and dates for each application: _____

4. What is the nature of the proposed project?

   X New Construction _ Expansion _ Occupancy of Existing Building

   If new construction specify as: X Commercial; _ Residential; _ Industrial

5. Provide a narrative description of the proposed project (attach additional pages if necessary). Applicant must be as specific as possible in describing: (1) the type of business proposed to be conducted at the site; (2) current condition of the site including size and condition of any existing structures, environmental conditions, and past uses of the site; (3) proposed development/redevelopment activities, scope of work, type of construction, etc.; (4) financing; (5) why Business Assistance Program monies are necessary for completion of the project; and (6) how the project is consistent with the goals and objectives identified in the TIF Redevelopment Plan or Business District Plan.

   (1) NAPA AUTO PARTS STORE (2) EMPTY LOT + ADDITIONAL LOT APROX (3) BUILD NEW BUILDING, STEEL + BRICK (4) FNB BANK (5) WE ARE A SMALL TO MED. SIZE COMPANY THAT NEEDS TO TAKE ADVANTAGE OF ALL HELP AVAILABLE TO US. WE HAV TO COMPET. WITH LARGE COMPETITORS. (6) WE BELIEVE A PROJECT LIKE OURS IS WHAT THE PROGRAM IS FOR. WE WILL PROVIDE GOOD JOBS FOR THE AREA.

6. Are any public infrastructure improvements required for this project to proceed?

   _ YES X NO. If Yes, describe improvements required:

   _____

7. Will the applicant obtain competitive bids from local contractors and sub-contractors?

   X YES _ NO

8. Identify: Project Start Date: MARCH - APRIL and Project Completion Date: December [illegible] JMC

RETURN TO AGENDA

Miscellaneous

1. Does project involve a move from another location? ☐ NO ☒ YES

   If Yes, indicate City and State 1050 S LINCOLN TRAIL JMC

2. Business Development Program Benefit Sought:

   ☒ TIF Program (reimbursement of TIF-eligible project costs)

   ☐ Lincoln Trail TIF Façade and Site Improvement Program

   ☐ Business District Program (reimbursement of eligible Business District project costs)

   ☒ Economic Incentive Agreement (Sales Tax Rebate)

3. Applicant acknowledges that, to obtain benefits under the City of Fairview Heights' Business Assistance Program, the proposed project must be of a nature that a building permit must be obtained through the City of Fairview Heights. As such, the applicant agrees that such a permit must be obtained prior to disbursement of any funding under the Business Assistance Program.

   ☒ Applicant Agrees ☐ Applicant Disagrees

SIGNATURE OF PROJECT REPRESENTATIVE

I hereby certify I have read and understand the content of the Business Assistance Program Document and to the best of my ability present the above information as true and accurate.

James McKay — C.Chairman — _____

NAME **TITLE** **DATE**

NOTE: Applications will not be considered for approval unit they are completed in full and signed by the applicant.

LEGAL DISCLAIMER: completion of this application does not entitle the applicant to financial assistance under the Business Assistance Program. Any such assistance must be approved by the Fairview Heights City Council.

All applications shall be submitted to Mike Malloy, AICP, at the address listed below. If you have any questions, please contact:

Mike Malloy, AICP
Director of Economic Development
City of Fairview Heights
10025 Bunkum Road
Fairview Heights, IL 62208
618.489.2033 (Direct)
618.791.3980 (Cell)
618.489.2067 (Fax)
malloy@coth.org

RETURN TO AGENDA

Exhibit B
Development Agreement
Reporting Form

RETURN TO AGENDA

City of Fairview Heights, Illinois

Development Agreement
Reporting Form*
Year,_____

A.Project #_____

B. Name of Project _____

C. Owners of Project _____

D.Address of Project _____

E.Total Private Investment Required_____

F.Total Private Sector Investment Made_____

G.Total $'s Infused into Project by City_____

H.Payment Schedule of City per $ Amount and Dates(s)_____

I.Completion Date of Project _____

J. Number of full time equivalent (FTE) jobs retained ,if required,in Development Agreement___
(Attach list of retained employees)

RETURN TO AGENDA

K. Number of full time equivalent (FTE) jobs created, if required. in Development Agreement___
(Attach list of new employees)

L. Amount of Sales Required to be Generated $_____in year___,____,____,___

M. Amount of Sales Generated $ _____ in year___,____,____,___
(Attach documentation of annual sales)

I (We) hereby submit the above information as true and correct.

_____	_____	_____
Name	Title	Date
_____	_____	_____
Name	Title	Date

*City Reserves Right To Request Additional Information Subject To the Content of any specific Development Agreement

RETURN TO AGENDA

Exhibit C
Examples of Payment Reductions

RETURN TO AGENDA

Examples of Payment Reductions

Should Terms and Conditions of Development Agreement Not Be Met

A. $5,000,000.00 of sales required annually
$4,500,000.00 of sales occurred
$500,000.00 short fall

$4,500,000 / $5,000,000 = 90% of sales requirement met

$23,214.00 1st year rebate in agreement
X .90%
$20,892.50 1st year revised rebate paid to Developer

B. $464,295.00 of private investment required

$450,000.00 of private investment made
$14,295.00 shortfall

$450,000.00 / $464,295.00 = 96.9%

100 – 96.9 = 3.1% Reduction In Rebate

C. 16 jobs required to be created 1st year
14 jobs created
2 jobs shortfall

14 / 16 = 87.5%

100 – 87.5% = 12.5% Rebate in Rebate 1st year

$23,214.00 1st year rebate in agreement
X .875%
$20,312.25 1st revised rebate to developer

D. 10 years required to be open
8 years in operation
2 year shortfall
8 / 10 = 80%

100 – 80 = 20% of rebate to be paid back by Developer

$69,644.00 Total rebate in agreement paid to Developer
X .80%
$55,715.20

RETURN TO AGENDA

$69,644.00
-$55,715.20
$13,928.80 Developer pays back to City

Note: Should more than 1 requirement not be met, the applicable %'s shall be applied in each instance.

(1) Not inclusive; other requirements not being met would be calculated using a similar method.

RETURN TO AGENDA

Exhibit D
Lincoln Trail Corridor
Development Standards

Lincoln Trail Corridor Development Standards – Checklist

RETURN TO AGENDA

See the Development Design Standards for a description of each of the following improvement items.

A. EXTERIOR BUILDING ELEMENTS

WALLS -Changes to exterior wall materials/colors ..... ☐

PARAPET WALLS -Addition of ornamental/architectural panels to emulate parapet walls. ..... ☐

BUILDING FAÇADES - Articulating building facades for functional/visual architectural interest..... ☐

ARCHITECTURAL ORNAMENTATION - Addition of exterior building elements (faux columns/beams, etc.) to break up long homogeneous facades ..... ☐

ROOFING - Changes to exterior roof materials/colors..... ☐

DOORS & WINDOWS - Adding and/or enhancing doors and windows ..... ☐

AWNINGS - Addition of architecturally compatible awnings..... ☐

SHUTTERS - Addition of architecturally compatible shutters ..... ☐

BUILDING FAÇADE LIGHTING – Addition of architectural façade lighting. ..... ☐

EQUIPMENT SCREENING - Screening visual clutter on roofs such as HVAC Units, cooler towers or electrical equipment..... ☐

B. SITE ENHANCEMENT ELEMENTS

PARCEL ASSEMBLY ..... ☐

STRUCTURE DEMOLITION ..... ☐

DRIVEWAYS - Sharing of Driveways and/or reducing curb cut widths. ..... ☐

PERIMETER LANDSCAPE – For aesthetics and screening of parking lots and service areas ..... ☐

PARKING LOT LANDSCAPE - Landscape islands on the interior of parking lots ..... ☐

PARKING LOT LIGHTING ..... ☐

PERMEABLE PAVEMENTS ..... ☐

SIDEWALKS - Installation of sidewalks in ROW and/or sidewalk connection from ROW sidewalk to front door. ..... ☐

BUILDING ENTRY AREAS – Developing pedestrian areas at building entrances with color and/or imprinted paving or pavers..... ☐

BUILDING ENTRY LANDSCAPE PLANTINGS - Addition of landscape plantings (above ground or in-ground) at building entrances ..... ☐

FLAG POLES AND SITE FURNISHINGS ..... ☐

WATER FEATURES ..... ☐

UNDERGROUNDING UTILITIES - Placement of utilities underground ..... ☐

C. SIGNING

BUILDING SIGNS - Addition of signing compatible with building architecture ..... ☐

SITE SIGNS - Site signage enhancements ..... ☐

SIGN REMOVAL - Removal of pole signs ..... ☐

TOTAL NUMBER OF IMPROVEMENT ITEMS CHECKED ..... ☐

RETURN TO AGENDA

D. POSSIBLE FUNDING(1) (TOTAL PROJECT COST NOT TO EXCEED $150,000)

# of improvements checked

Make Improvements (10) – potential 50% funding from City
Make Improvements (9) – potential 45% funding from City
Make Improvements (8) – potential 40% funding from City
Make Improvements (7) – potential 35% funding from City
Make Improvements (6) – potential 30% funding from City
Make Improvements (5) – potential 25% funding from City
Less than 4- No City Funding

E. POSSIBLE FUNDING (TOTAL PROJECT COST BETWEEN $150,001 AND $300,000)

Make no less than 8 improvements – 25% funding from City

F. POSSIBLE FUNDING (TOTAL PROJECT COST BETWEEN $300,001 AND $500,000)

Make no less than 10 improvements – 15% funding from City

G. POSSIBLE FUNDING (TOTAL PROJECT COST EXCEEDS $500,000)

Make no less than 12 improvements – 10% funding from City, not to exceed $75,000.

[1]*City financial participation shall require compliance with prevailing wage rate ordinance, lowest responsible bidder ordinance; individual phases of a project can be considered separately.*

RETURN TO AGENDA

PROPOSED ORDINANCE NO. 27-'16

AN ORDINANCE AUTHORIZING THE SALE OF MUNICIPALLY OWNED REAL PROPERTY COMMONLY KNOWN AS 10408 LINCOLN TRAIL, FAIRVIEW HEIGHTS, ILLINOIS.

WHEREAS, the City of Fairview Heights, Illinois owns the following described Real Property:

"Lot 2 of "DOYLES SUBDIVISION", a subdivision of Lots 12, 13, & 31 of St. Clair Hills, a subdivision of part of the W1/2 of Section 28 T2n, R8W of the 3rd P.M., St. Clair County, Illinois; reference being had to the plat thereof recorded in the Recorder's Office of St. Clair County, Illinois, in Book of Plats "44" on page 7. Excepting, however, that part conveyed to State of Illinois, Department of Public Works and Buildings, more particularly described as follows: All of that portion of said Lot 2 lying Northerly of a line beginning at a point on the West line of Said lot 2, said point being 43.81 feel Southerly of Station 340+02.04 on the centerline of F. A. Route 13 (marked U.S. Route 50 also known as Lincoln Trail) as said centerline is now surveyed and staked out for the Department of Public Works and Buildings of the State of Illinois; thence Southeasterly to a point 55.00 feet Southerly of Station 340+58.00 on said centerline; thence Easterly to a point on the East line of said Lot 2, said point being 55.00 feet Southerly of Station 341+02.13 on said centerline. Township of Caseyville, County of St. Clair, State of Illinois."

Said Real Property is located at 10408 Lincoln Trail, Fairview Heights, Illinois and is currently vacant; and

WHEREAS, the City Council of the City of Fairview Heights has determined that it is no longer necessary, appropriate, or in the best interest of the City of Fairview Heights that it retain title to the Real Property, and that the Real Property is not required for the use of, or profitable to, the municipality; and

WHEREAS, pursuant to Section 11-76-2 of the Illinois Municipal Code notice has been given of the proposal to sell the Real Property and bids have been invited for the purchase of the Real Property, said notice having first been published on March 3, 2016 and having been published three successive weeks in the Fairview Heights Tribune, a newspaper published in the municipality; and

RETURN TO AGENDA

WHEREAS, pursuant to said notice, bids were opened at the regular meeting of the City Council held on April 5, 2016; and

WHEREAS, the following bids for the purchase of the Real Property have been received:

BIDDER	AMOUNT
James V. McKay	$50,501.50
MHF Properties	

WHEREAS, the City Council finds and determines that the best interest of the City of Fairview Heights and its residents will be served by the acceptance of the bid submitted by James V. McKay/MHF Properties and the sale of the Real Property to such bidder for the amount bid of FIFTY THOUSAND FIVE HUNDRED ONE DOLLAR AND FIFTY CENTS ($50,501.50) (which amount represents the only bid) is found to be in the best interest of the City of Fairview Heights for the following reasons:

A retail business is proposed to be constructed on the property.

NOW, THEREFORE, IT BE ORDAINED BY THE CITY COUNCIL OF THE CITY OF FAIRVIEW HEIGHTS, ST. CLAIR COUNTY AND STATE OF ILLINOIS:

SECTION 1. The foregoing recitals are incorporated herein as findings of the City Council.

SECTION 2. The bid of James V. McKay, MHF Properties in the amount of FIFTY THOUSAND FIVE HUNDRED ONE DOLLAR AND FIFTY CENTS ($50,501.50) is hereby accepted by the City Council of the City of Fairview Heights for the Real Property.

RETURN TO AGENDA

SECTION 3. The Mayor is hereby authorized and directed to sign and the City Clerk is hereby authorized and directed to attest a contract for the sale and purchase of the Real Property.

SECTION 4. Upon satisfaction of the terms of the aforesaid contract and upon the payment or securing of the aforesaid bid price in the manner provided in said contract, the Mayor is hereby authorized and directed to convey and transfer the Real Property to James V. McKay/MHF Properties by a proper deed of conveyance, stating therein the aforesaid consideration and the City Clerk is hereby authorized to acknowledge and attest such deed and to affix thereto the seal of the City of Fairview Heights.

SECTION 5. The Mayor and the City Clerk are hereby authorized, respectively, to execute and attest such other documents as may be necessary to the conveyance herein authorized.

SECTION 6. This Ordinance shall be in full force and effect from and after its passage by a vote of at least three fourths of the corporate authorities now holding office and approval in the manner provided by law.

READ FIRST TIME:

READ SECOND TIME:

PASSED:

APPROVED:

_____
MARK T. KUPSKY – MAYOR
CITY OF FAIRVIEW HEIGHTS

ATTEST:

_____
KAREN J. KAUFHOLD – CITY CLERK

RETURN TO AGENDA

PROPOSED ORDINANCE NO. 28-'16

AN ORDINANCE AUTHORIZING THE CITY TO ENTER INTO A REVISED REDEVELOPMENT AGREEMENT WITH STEVE GIGER AT 10610 LINCOLN TRAIL, FAIRVIEW HEIGHTS, IL.

WHEREAS, on February 18, 2016, the Corporate Authorities passed and approved Resolution No. 3982-2016 authorizing the approval of a Letter of Intent with Steve Giger for the City to enter into a Redevelopment agreement with Developer for the expansion of Perfect Finish, Inc. to be located at 10610 Lincoln Trail, Fairview Heights, IL, 62208 (the "Development Project").

WHEREAS, Ordinance No. 1727-2016 was on March 15, 2016 and approved on March 21, 2016 and is hereby being revised by this Ordinance.

WHEREAS, Steve Giger has applied for benefits under the City's Business Assistance Program (Application No. 16-1) in connection with the Development Project.

WHEREAS, the proposed expansion, commonly referred to as Perfect Finish, Inc., with accompanying public and private infrastructure, is consistent with, and will promote the purposes outlined in the Lincoln Trail Corridor Development Standards section of the Business Assistance Program and, in order to achieve the objectives of the Lincoln Trail Corridor Development Standards the City intends to assist the developer in the development of the Project.

WHEREAS, the expansion project will employ additional persons over and above those already employed within the City and additional Municipal Sales Tax Revenues will be generated for the benefit of the City and its residents.

WHEREAS, as a Home Rule Unit of government under the Constitution of the State of Illinois and under the Tax Increment Redevelopment Act, 65 ILCS 5/11-74.4-1

RETURN TO AGENDA

"TIF ACT." The City has the authority to enter into this agreement and to share or rebate it's TIF Revenues (as hereinafter defined) generated by the Expansion Project.

NOW, THEREFORE, BE IT ORDAINED BY THE CITY COUNCIL OF THE CITY OF FAIRVIEW HEIGHTS, ST. CLAIR COUNTY, ILLINOIS:

SECTION 1. AGREEMENT. The Mayor and the City Clerk are hereby authorized to sign and attest to the Redevelopment Agreement attached hereto as "EXHIBIT A" on behalf of the City Council.

SECTION 2. PASSAGE. This Ordinance shall be in full force and effect from and after its passage and approval as provided by law.

READ FIRST TIME:

READ SECOND TIME:

PASSED:

APPROVED:

_____
MARK T. KUPSKY – MAYOR
CITY OF FAIRVIEW HEIGHTS

ATTEST:

_____
KAREN J. KAUFHOLD – CITY CLERK

"EXHIBIT A"

RETURN TO AGENDA

CITY OF FAIRVIEW HEIGHTS, ILLINOIS
REVISED REDEVELOPMENT AGREEMENT

Steven Giger d/b/a Perfect Finish, Inc.

Expansion of Existing Perfect Finish Auto Body Repair Shop

Located at 10610 Lincoln Trail, Fairview Heights, Illinois

RETURN TO AGENDA

REDEVELOPMENT AGREEMENT

This Redevelopment Agreement (Agreement) dated as of _____, 2016, is made by and between the City of Fairview Heights, St. Clair County, Illinois, 10025 Bunkum Road, Fairview Heights, Illinois, 62208 ("City"), and Steven Giger d/b/a Perfect Finish, Inc., 10610 Lincoln Trail, Fairview Heights, Illinois, 62208 ("Developer"). The City and Developer shall be referred to collectively as the Parties.

RECITALS

1. The City, as a home rule unit of government under the Constitution of the State of Illinois, possesses the authority under its home rule powers and under the Tax Increment Allocation Redevelopment Act, 65 ILCS 5/11-74.4-1 et seq. ("TIF Act"), to enter into this Agreement with the Developer in furtherance of its redevelopment plan and project to, *inter alia,* promote the health, safety, and welfare of the City's inhabitants by promoting enhancements to the local tax base and to create employment.

2. Pursuant to the TIF Act, the City Council of the City adopted the following ordinances:

(a) Ordinance No. 1379-2007, entitled "An Ordinance Approving the Tax Increment Redevelopment Plan and Redevelopment Project for the Lincoln Trail Redevelopment Project Area," which approved a redevelopment project and plan under the TIF Act; and

(b) Ordinance No. 1380-2007, entitled "An Ordinance Designating the Lincoln Trail Redevelopment Project Area," designating the Lincoln Trail Tax Increment Redevelopment Project Area, legally described therein as a redevelopment project area pursuant to the TIF Act; and

(c) Ordinance No. 1381-2007, entitled "An Ordinance Adopting Tax Increment Financing for the Lincoln Trail Redevelopment Project Area," adopting tax increment financing of "redevelopment project costs" (as defined in the TIF Act).

3. The Developer desires to undertake building renovation and site improvements at 10610 Lincoln Trail, Fairview Heights, Illinois, 62208 and legally described on Exhibit A (the "Project Area"). Developer currently owns the real estate underlying the Project Area.

4. The Developer desires to undertake building renovation and site improvements to the existing Perfect Finish Collision Center and Auto Body Repair Shop described in detail in the attached Exhibit A and made part of this Agreement (the "Project").

5. The City Council of the City has determined that (1) The Project Area is presently a blighted area within the meaning of the TIF Act, (2) the Project will be

consistent with the land uses proposed by the Redevelopment Plan and will promote the health, safety and welfare of the City's inhabitants, enhance the local tax base and create employment, and, within the Project Area, alleviate conditions of blight and conditions which, if not addressed, would become blight, and (3) assisting the Developer with the financing of certain portions of the Project that qualify as redevelopment project costs will further the objectives of the Redevelopment Plan and is, therefore, authorized under the TIF Act and the City's home rule powers.

6. By adopting Ordinance No. 1381-2007, the City Council of the City directed that certain increases in *ad valorem* real estate taxes attributable to increases in the equalized assessed value of real property within the TIF Area are to be allocated to and, when collected, paid to the City Treasurer of the City and deposited into the "Special Tax Allocation Fund for the Lincoln Trail Redevelopment Project Area" (Fund) for the purpose of paying Eligible Costs.

NOW, THEREFORE, in consideration of (1) the matters set forth in the Recitals to this Agreement, (2) the representations, warranties, covenants, and agreements set forth below, and (3) other good and valuable consideration, the receipt and sufficiency of which is hereby acknowledged, the City and the Developer agree as follows:

1. INCORPORATION OF RECITALS.

The Recitals set forth above are an integral part of this Agreement and are hereby ratified, confirmed, and incorporated as if fully set forth in this Section 1 of this Agreement.

2. REPRESENTATIONS AND WARRANTIES.

To induce the City to execute this Agreement and perform its obligations hereunder, the Developer represents and warrants to the City as follows:

(a) Developer is a duly organized and validly existing corporation organized and in good standing under the laws of the State of Illinois, authorized to do business in the State of Illinois.

(b) The documents to which the Developer is a party which pertain to the Project (Developer Documents), when executed and delivered by the Developer, will be the legal, valid and binding obligations of Developer and will be enforceable in accordance with their terms except to the extent that enforcement may be limited by any applicable bankruptcy, reorganization, insolvency, moratorium or other law or laws affecting the enforcement of creditors' rights generally or against entities such as the Developer and further subject to the availability of equitable remedies.

(c) No event has occurred and is continuing which, with the lapse of time or the giving of notice, or both, would constitute a default under the Developer Documents.

(d) No litigation or proceedings in any court, governmental body or administrative agency are pending or are threatened against the Developer which could: (i) materially adversely affect the ability of the Developer to perform his/its obligations pursuant to and as contemplated by this Agreement or under any of the Developer Documents; or (ii) materially adversely affect the operation or financial condition of the Developer;

(e) The execution, delivery, and performance by the Developer of this Agreement does not constitute or will not, upon the giving of notice or lapse of time, or both, constitute a breach or default under any other agreement to which the Developer is a party of by which the Developer or Developer's property may be bound or affected.

(f) The persons executing the Agreement and who will execute the Developer Documents on behalf of the Developer have been duly authorized by all appropriate action to enter into, execute and deliver this Agreement and the Developer Documents and perform the obligations contained herein and therein.

(g) The construction of the Project by the Developer does not now, nor in the future will, violate: (i) any statute, law, regulation, rule, ordinance or executive or judicial order of any kind (including, without limitation, zoning and building laws, ordinances, codes or approvals and environmental protection laws or regulations); or (ii) any building permit, restriction of record or any agreement affecting the Project.

The City represents and warrants to the Developer as follows:

(a) The City has authority under the City's home rule power granted in the 1970 Constitution of the State of Illinois and under the TIF Act to enter into, execute, and deliver this Agreement and perform the City's obligations pursuant to the terms contained in this Agreement.

(b) The persons executing this Agreement on behalf of the City have been duly authorized by all appropriate action into enter into, execute and deliver this Agreement.

(c) The documents to which the City is a party pertaining to this Agreement and the ordinance relating thereto (City Documents), when executed and delivered by the City, or when adopted by the City in the case of the ordinance, will be the legal, valid and binding obligations of the City enforceable in accordance with their terms, except to the extent that enforcement thereof may be limited by any applicable bankruptcy, reorganization, insolvency, moratorium or other law or laws affecting the enforcement of credits' rights generally or against entities such as the City and further subject to the availability of equitable remedies.

(d) To the City's knowledge, no event has occurred and is continuing which, with the lapse of time or the giving of notice, or both, would constitute an Event of Default by the City under the City Documents. For the purposes of this Agreement, "the City's knowledge" shall mean the actual knowledge of the Director of Economic Development (DED).

(e) No litigation or proceedings are pending in any court, governmental body or administrative agency or, to the City's knowledge, are threatened against City, which will materially adversely affect the ability of the City to perform its obligations pursuant to and as contemplated by the terms and provisions of this Agreement or the City Documents, except as provided for herein.

(f) To the City's knowledge, the execution, delivery and performance by the City of this Agreement does not constitute or will not, upon the giving of notice or lapse of time or both, constitute a reach or default under any other agreement to which City is a party or by which the City or the City's property may be bound, which will prevent performance by the City of the City's obligations under this Agreement and the City Documents.

(g) The Project Area has been designed as a part of a tax increment redevelopment project area pursuant to the TIF Act and the benefits therefrom are available to the Developer as and to the extent as set forth in this Agreement.

The Parties agree that all of the representations and warranties set forth in this Agreement are true as of the execution date of this Agreement and will be true at all times during the term of this Agreement.

3. DEVELOPMENT REQUIREMENTS, CONSTRUCTION OF PROJECT, AND MAINTENANCE OF CERTAIN PROPERTY.

(a). Responsibilities of Developer. The Developer shall construct the Project in accordance with the Development Plan set forth in Exhibit A which has been approved by the City and the OED in accordance with the procedures described in Section 3(c) below. In addition, the Developer and any heirs and/or successors shall:

A. Invest not less than $498,209.00 in the Project; and

B. Retain 15 FTE jobs and create 2 FTE jobs within or before two (2) years of operation; and

C. Create sales after the first year of operation (according to the date of issuance of occupancy permit) generating not less than $792,000.00 in sales annually and continue to generate not less than $792,000.00 in sales annually for the next five (5) years; and

D. Developer, heirs, and successors agree to remain open as an auto repair facility at 10610 Lincoln Trail, Fairview Heights, Illinois for not less than five (5) years beyond the Project Completion Date; and

E. Developer shall comply with all existing and applicable Federal, State, County, and Local laws and ordinances, including, but not limited to, those which establish the applicable prevailing wage to be paid by Developer to workers on the Project. Developer, like the City, acknowledges the value of trade unions in construction projects, as demonstrated by the passage of Resolution No. 3887-2015, and agrees that 100% of Developer's labor will be provided by contractors using labor provided by participating member trade unions affiliated with the Southwestern Illinois Building and Trades Council; and

F. Developer agrees to reimburse the City for all public funds abated and/or provided pursuant to this Agreement in the event that it fails to meet the obligations set forth in this Agreement, and agrees that said reimbursement or payment reduction will be made pursuant to the formula described in Exhibit C; and

G. Developer agrees to complete and return annually a Development Agreement Reporting Form attached as Exhibit B; and

H. Agree to construct the building and site in conjunction with its BAP Application 1-16 and consistent with the ten (10) Lincoln Trail Corridor Development Standards contained within the plans as submitted on January 29, 2016; and

I. At all times comply with all existing and applicable Federal, State, County, and Local Laws and ordinances; and

J. Obtain and maintain all insurance coverages required by Section 37-4-1 of the Revised Code of Ordinances of Fairview Heights, Illinois, and name the City of Fairview Heights as an additional insured on the policies of insurance specified therein, as set forth in Section 5(c) to this Agreement; and

K. Allow the City to place temporary signage on the Project Area during construction indicating that the Project received financial assistance from the City; and

L. Issue at least fourteen (14) days written notice to the City that the payment(s) required of the City to Developer pursuant to Section 4(a) is/are due.

(b). Commencement and Completion Date. The Developer shall commence construction on or before June 1, 2016 and shall complete the Project on or before December 31, 2016 (Project Completion Date). The completion date may be extended for up to an additional three (3) months if Developer has not completed the Project despite due diligence in prosecution of construction activities, provided that (i) Developer promptly furnishes the City with written

notice specifying the reasons for the delay, the expected length of delay, and (ii) Developer uses all reasonable efforts to minimize the delay.

(c). Plans and Specifications. The Project shall conform to Project Description set forth in Exhibit A. No material deviation from the Development Plan described in Exhibit A shall be made by Developer without the prior written consent of the DED and other applicable Departments of the City, which consent shall not be unreasonably withheld or delayed, provided nothing shall impact the City's right to withhold consent in accordance with its standard practices and procedures.

The Project and Development Plan shall conform to the terms of this Agreement and all applicable federal, state, and local statues, laws, ordinances and regulations. Developer shall comply with all federal, state and municipal laws and ordinances concerning the rights of accessibility for the physically disabled, including, without limitation, the Americans with Disabilities Act, 42 U.S.C. 12101 *et seq.* (1990), and the Environmental Barriers Act of Illinois, 410 ILCS *25/1 et seq.* (1992) as the same are amended form time to time.

Upon receipt of proposed changes to the Project or Development Plan, the DED shall have seven (7) days in which to approve or to reject the same by written notice to the Developer. Such approval shall be subject to the City's customary review standards and shall not be unreasonably withheld or delayed. In the event the DED does not approve the revised plan(s), the DED shall specify in detail the reasons therefore. Developer shall have reasonable time within which to submit revised plans to the DED for his or her approval, which approval shall not be unreasonably withheld or delayed. If the DED fails to approve or reject (specifying reasonable details therefore) a submission or re-submission by the Developer within fifteen (15) days of the DED's receipt of same, then the DED will be deemed to have approved such submission or re-submission.

(d). Limited Applicability of DED Approval. Any approvals of the Project or Development Plans by the DED are for the purposes of this Agreement only and do not affect or constitute approvals required for building permits or approvals required pursuant to any other ordinance, resolution, or other requirement of the City and such approval does not constitute approval or endorsement of the quality, structural soundness, safety or economic feasibility of the Project.

(e). Constructing the Project. Prior to commencement of the Project pursuant to this Agreement, Developer shall deliver the following to the DED:

(i) The general contractor's sworn statement setting forth all then existing contracts and all of the projected and anticipated costs of the Project;

(ii) A description of Developer's financing sources (Financing) that confirms adequate financing for the Project including what proportion of the funds, if any, shall be Developer's equity capital and evidence of the availability thereof. If any portion of the funds will be borrowed, Developer shall

furnish a commitment for a conventional construction loan from an institutional lender or from Developer's parent corporation providing adequate financing, identifying, among other things, the lender the amount of the loan, length of the term and the applicable interest rate (Commitment). The terms of the Commitment and other financing shall be subject to the reasonable approval of the City with respect to the adequacy of the Financing and Developer's equity to assure that funds will be readily available to support the costs of the Project including all Development Requirements and other non-construction costs;

(iii) The contract between Developer and the General Contractor for the construction of the Project; and

(iv) A copy of the application for the building permit with regard to the construction of the Project showing all fees paid.

Provided that the Commitment is approved by the City, an independent institutional lender shall be permitted to secure its loan by a mortgage (First Mortgage) encumbering the Project. The terms of any construction loan agreement and the documents which evidence and secure the Financing shall be subject to the reasonable approval of City, which approval shall not be unreasonably withheld or delayed.

(f). Relocation of Utilities. Any relocation, repair, or replacement of any existing City power, communications, or other utilities lines in and under the Project or the public streets or private property owned by Developer or adjacent to the Project shall be relocated, repaired, or replaced by the Developer at its sole cost and in accordance with the City's standard specifications.

(g). Certificate of Completion. Upon completion of the Project in accordance with the provisions contained in this Agreement and commencement of business, the DED, upon written request by Developer, shall furnish a Certificate of Completion (Certificate) to the Developer. The Certificate shall be a conclusive determination of satisfaction and termination of the covenants in this Agreement with respect to the obligations of Developer. The Certificate shall not constitute evidence that Developer has complied with applicable provisions of federal, state and local laws, ordinance and regulations with respect to the construction of the Project. The Certificate shall be in recordable form.

Upon written request by Developer for the Certificate, the DED, within thirty (30) days after receipt of the same, shall undertake an inspection of such Project and thereafter provider Developer either with a Certificate or a written statement indicating in adequate detail how Developer has failed to complete the Project in conformity with this Agreement, or is otherwise in default, and what measures or acts will be necessary, in the reasonable opinion of the DED, for Developer to perform as a condition to receipt of a Certificate. Developer shall have sixty (60) days to correct any such nonconformity or default. Upon

compliance with DED requirements, Developer shall resubmit a written request for a Certificate from the DED. The furnishing of such Certificate to Developer shall not be unreasonably withheld or delayed.

(h). Mortgagees Not Obligated to Construct. Notwithstanding any other provision of this Agreement, the institutional holder of any mortgage or its affiliate authorized by the Agreement shall not be obligated by the provisions of this Agreement to complete the Development Requirements and the construction of the Project or to guarantee such construction or completion. Nothing in this paragraph or any other paragraph of this Agreement shall be deemed or construed to permit or authorize any such holder or its affiliate to develop or use the Project or any part thereof for any use or to construct any improvements other than the Project as provided for or permitted in this Agreement.

Whenever the City shall deliver a notice or demand with respect to any breach or default by the Developer of its obligations under this Agreement, the City shall at the same time forward a copy of such notice or demand to any institutional mortgagee whose address has been given in writing to the City and the DED. After any such default by the Developer, each institutional mortgagee shall have the right but not the obligation to remedy such default within reasonable time following receipt of notice by such mortgagee.

Whenever the mortgagee shall deliver a notice or demand to the Developer with respect to any breach or default by the Developer of its obligations under the applicable mortgage loan documents, the mortgagee shall at the same time forward a copy of such notice or demand to the City at the addresses listed in this Agreement. After any such default by the Developer, the City has the right, but not the obligation, to remedy such default within a reasonable time following receipt of such notice.

4. FINANCING REQUIREMENTS AND CITY ASSISTANCE.

(a). Reimbursement for Redevelopment Project Costs. Provided Developer substantially performs all of its obligations under this Agreement and furnishes the City with a certified cost analysis, certified by the independent architect and the chief financial officer of the Developer, setting forth all redevelopment project costs (as defined in the TIF Act) for the Project on or before December 31, 2016, the City shall reimburse the Developer for certain "Qualified Redevelopment Project Costs" to the extent provided below. The City shall:

Provide funds to Developer in the amount of $24,910.45 after six (6) months of operation, on or before June 30, 2017; provide an additional $24,910.45 after the first year of operation, on or before December 31, 2017; and final funding in the amount of $24,910.45 after the second year of operation, on or before December 31, 2018 for a total City financial participation and assistance not to exceed $74,731.35.

Reimbursement shall be conditioned upon the Developer submitting to the City receipts or other proof that it incurred Qualified Redevelopment Project Costs. The Developer shall seek reimbursement in writing pursuant to Sections 3(a)(L) and 8(j) of this Agreement.

(b). Source of Reimbursement. The City shall make any payments due to Developer under this Agreement solely from the TIF No. 3 Fund. The provisions of this Agreement, including any pledges of tax revenues, are subject to the provision of any pledges of particular portions of incremental taxes deposited from time to time into the Fund, which pledges were made prior to the execution and delivery of this Agreement. This obligation is not a general obligation of the City.

(c). Maximum Reimbursement. The City shall remit to the Developer the requested TIF incremental reimbursements set forth above, but not to exceed a total reimbursement of Seventy-Four Thousand Seven Hundred Thirty-One Dollars and Thirty-Five Cents ($74,731.35).

(d). Sales Tax Abatement. The City shall authorize Developer to receive a Sales Tax Abatement (Sales Tax Exemption Certificate), subject to the approval of the Illinois Department of Revenue, for building materials through the City's Enterprise Zone.

5. DEVELOPER'S COVENANTS.

(a). Use Restrictions. Equal Opportunity Laws and Covenants Running with the Land. The Developer covenants and agrees as follows:

(i) The Project Area shall be utilized solely for construction of improvements to be used in accordance with the Site Plan, the terms and provision of this Agreement, the commitment, and all applicable state and local laws, ordinances, and regulations.

(ii) Neither Developer nor any of its contractors, subcontractors, or material supplies shall discriminate based upon race, color, religion, sex, national origin or ancestry, age, handicap or disability, sexual orientation, military status, parental status, or source of income in the construction of the Project and shall comply with any and all federal, state and local laws, statutes, ordinances, or regulations with regard to non-discrimination in the construction of the Project. The general construction contract for the acquisition, construction, improvement and equipping of the Project, all subcontracts, and all contracts of the operation of all or any part of the Project by persons other than the Developer shall contain requirements to this effect.

(b). Developer's Indemnity.

Developer shall indemnify, defend, and hold harmless the City (including without limitation any person at any time serving as a member, officer, agent or employee of the City) against and from any and all losses, claims, damage, penalties, expenses or liabilities of any nature (including reasonable attorneys' fees and court costs) suffered or incurred by City, or any person, firm, corporation or other legal entity, arising from the conduct or management of, or from any work or thing done on, the Project during the term of this Agreement, including without limitation:

(i) Any condition of the Project or the Project Area, including without limitation any environmental condition;

(ii) Any breach or default on the part of the Developer in the performance of any of its obligations under this Agreement not due to any act of neglect or default under this Agreement by the City;

(iii) Any failure of the Developer or any contractor to pay contractors, subcontractors or material men;

(iv) Any material misrepresentation or omission in the Developer's documentation to City to participate as the Developer of the Project which is the result of information supplied or omitted by the Developer or by agents, employees, contractors or persons acting under the control or at the request of the Developer;

(v) Any failure of the Developer to redress any misrepresentations or omissions in this Agreement or any other agreement relating hereto;

(vi) Any act or negligence of the Developer or of any of its agents, contractors, servants, employees or licensees;

(vii) Any act or negligence of any assignee or lessee of the Developer, or of any agents, contractors, servants, employees or licensees of any assignee or lessee of the Developer; and

(viii) Any claim, cost or damage with regard to the use or misuse of the Project by the Developer.

The Developer shall indemnify and save the City, including without limitation any person at any time serving as a member, officer, agent or employee of the City, harmless from any such claim arising in such manner, or in connection with any action or proceeding brought thereon, and upon notice from the City, the Developer shall defend them in any such action or proceeding.

Developer further covenants to indemnify and save the City and its members, officers, agent and employees (past, present and future) harmless from any loss, claim, damage, tax, penalty or liability of any nature due to any and all suits, actions, legal or administrative proceedings, or claims arising or resulting from, or in any way connected with any act, failure to act, omission or misrepresentation by any person in connection with the issuance, sale, delivery, or remarketing of any securities issued in connection with the Project provided, that the indemnification provided in this sentence shall not extend to material inaccuracies, material misstatements or material omissions in information specifically provided by the City in writing for inclusion in any official statement or other disclosure document.

(c). Developer's Insurance.

The Developer, at its sole cost and expense, shall procure and maintain the following insurance provided by insurance companies acceptable to the City and authorized to transact business under the laws of the State of Illinois, as required under the Revised Code of Ordinances of Fairview Heights, Illinois, Chapter 37, Article 4, Section 1, and agrees to abide by the terms and conditions set forth therein:

(i) Commercial General Liability Insurance (CGL) providing for coverage equivalent to the Insurance Services Office Commercial General Liability Coverage Form No. CG 0001 12 07. Required liability insurance coverage shall be written in the occurrence form and shall provide coverage for operations of the Developer, operations of subcontractors (contingent or protective liability); completed operations; broad form property damage and hazards of explosion, collapse and underground; and contractual liability. The General Aggregate Limit shall be endorsed on a per project basis with coverage of at least Two Million Dollars ($2,000,000.00) per occurrence. The CGL policy shall have a projects-completed operations aggregate limit of Two Million Dollars ($2,000,000.00) and an each occurrence limit of One Million Dollars ($1,000,000.00).

(ii) Commercial Automobile Liability. The policy shall cover owned, non-owned, and hired vehicles. The Commercial Automobile Liability policy shall provide a Bodily Injury & Property Damage Liability Limit of One Million Dollars ($1,000,000.00), per each occurrence.

(iii) Employers Liability Coverage, providing for coverage of at least Five Hundred Thousand Dollars ($500,000.00) for each accident. The Employers Liability Coverage policy shall have a disease policy limit of Five Hundred Thousand Dollars ($500,000.00) and a disease - each employee limit of Five Hundred Thousand Dollars ($500,000.00).

(iv) Umbrella Liability. Any policy shall provide excess limits over and above the other insurance limits stated herein. The Developer may purchase insurance for the full limits required or by a combination of primary policies for lesser limits and remaining limits provided by the umbrella policy.

The Developer further agrees that, at the Developer's sole cost, the CGL policy shall provide by an endorsement in the appropriate manner and form that the City of Fairview Heights, Illinois, its officers and employees shall be named as additional insureds with respect to the policies and any umbrella excess liability coverage for occurrences arising in whole or in part out of the Project and operations performed.

All insurance shall remain in force during the period covering occurrences happening on or after the effective date and remain in effect during performance of the Work and all times thereafter when the Developer may be correcting, removing, or replacing defective work until notification of the date of final inspection. Termination or refusal to renew shall not be made without thirty (30) days prior written notice to the City by the insurer and the policies shall be endorsed so as to remove any language restriction or limiting liability concerning this obligation.

Certified copies of the original policies or certificate(s) of insurance by the insurer(s) issuing the policies and endorsements setting forth the coverage, limits and endorsements shall be filed with the City Clerk before the City will execute this Agreement. A certificate of insurance shall include a statement that the coverage and limits conform to the minimums required by this Section. Any exception or deviation shall be brought to the attention of the City for a ruling of acceptability. In no event shall any failure of the City to receive policies or certificates or to demand receipt be construed as a waiver of the Developer's obligation to obtain and keep in force the required insurance.

All costs for insurance as specified herein will be considered as included in the cost of this Agreement. The Developer shall, at its expense and risk of delay, cease operations if the insurance required is terminated or reduced below the required amounts of coverage. Developer in the minimum amounts set forth herein shall not be construed to relieve the Developer form its obligation to indemnify in excess of the coverage in accordance with this Agreement.

6. PERFORMANCE

(a). Time is of the Essence.

Time is of the essence of this Agreement.

(b). Permitted Delays.

Neither the City nor the Developer shall be considered in breach of obligations with respect to the commencement and completion of the Development requirements in the event of delay in the performance of such obligations due to unforeseeable causes beyond such party's control and without such party's fault or negligence including, but not limited to, any delays or halts in the construction of the Project which are compelled by court order, acts of God, acts of the public enemy, acts of the United States or any state government or authority, acts of the other part, fires, floods, epidemics, quarantine restrictions, strikes, embargoes and severe weather or delays of subcontractors due to any such causes. The time for the performance of the obligations shall be extended for the period of the enforced delay if the City or the Developer, as the case may be, seeking the extension shall notify in writing the other party within twenty (20) days after the beginning of any such delay and such party utilizes diligence in attempting to complete performance of its obligations.

(c). Breach; Remedies.

Except as otherwise provided in this Agreement, in case of an Event of Default, upon written notice from the non-defaulting party, the party in default shall proceed to cure or remedy such default immediately and, in any event, shall complete such cure or remedy not later than thirty (30) days after receipt of such notice (unless a longer period is provided in Section 6(d)).

In the event that the Event of Default is not cured within the applicable time period, the non-defaulting party may institute such proceedings at law or in equity as may be necessary or desirable in its sole discretion to cure and remedy the default including, but not limited to, proceedings to compel specific performance of the defaulting party's obligations.

(d). Event of Default.

For purposes of the Agreement, the occurrence of any one or more of the following shall constitute an "Event of Default":

(i) If any warranty or representation made or furnished by the City or by the Developer (including, without limitation, the representations and warranties of the Developer described in Section 2), was not true and correct at the time made.

(ii) If the City or the Developer is in breach of any material provisions of this Agreement or any other agreement between the City and the Developer.

(iii) If any petition is filed by or against City or the Developer under the Federal Bankruptcy Code or any similar state or federal law, whether now or hereinafter existing, provided that, in the case of an involuntary proceedings, such petition is not vacated, stayed or set side within ninety (90) days after filing.

(iv) If the Developer defaults in fulfilling its obligations with respect to the completion of the Site Plan or abandons or substantially suspends construction work, or violates any other provision of this Agreement not otherwise specified in this Section 6(d), provided that any such default, violation, or abandonment or suspension shall not be cured, ended, or remedied within twenty (20) days of 15 the date the Developer receives written demand by City to cure such default, or such longer period to be determined by City in its sole discretion if the default cannot be reasonably cured within the twenty (20) day period, provided that the cure has been commenced by the Developer within said twenty (20) day period and thereafter diligently prosecuted to completion.

(v) If City fails to fulfill its obligations set forth in Section 4; or

(vi) If the Developer fails to comply with the use, occupancy and accessibility covenants affecting the Property described in Section 3 above; or

(vii) If the Developer fails to comply with the non-discrimination covenants described in Section 5 and the Affirmative Action Obligations set forth in Section 7; or

(viii) Failure of the Developer to pay real estate taxes or special assessments affecting the Project when due, or placing thereon any encumbrance or lien other than Financing or suffering any levy or attachment to be made, or any materialman's or mechanics' lien, or any other unauthorized encumbrance or lien to attach to the Project or any part thereof, and such taxes or assessments shall not have been paid, or the encumbrance or lien removed or discharged or provision satisfactory to the City made for such payment, removal or discharge within twenty (20) days after written demand by City to remove such lien or encumbrance; or

(ix) The Developer makes any assignment, pledge, encumbrance, transfer or other disposition as prohibited by this Agreement; or

(x) If either City or the Developer defaults in performance of any of its other obligations under this Agreement and does not cure the same within thirty (30) days of written notice from the other party; or

(xi) The Developer allows the conduct of general business operations at the Project Area to cease within five (5) years of the project Completion Date.

(e). Prior to Issuance of Certificate.

If prior to the time the City issues its Certificate of Completion Developer shall default in any specific manner as described in Section 6(d), then City may, upon written notice to Developer and the failure of Developer to cure such default within the applicable cure period, terminate this Agreement. In the event of termination, the City shall be excused from performance of any further obligations under this Agreement, shall be entitled to repayment of any and all amounts reimbursed to the Developer under this Agreement, as well as any rights available against Developer at law or in equity, including, without limitation, a suit for injunctive relief or specific performance and/or direct and consequential damages.

(f). After Issuance of a Certificate.

If after the date on which the City issues its Certificate of Completion Developer defaults in any specific manner as described in Section 6(d), including but not limited to, Section 6(d)(ix), the City shall be excused from performance of any further obligations under this Agreement, entitled to the repayment of any and all amounts reimbursed to the Developer under this Agreement, and any rights available against Developer at law or in equity, including, without limitation, a suit for direct and consequential damages.

(g). Waiver and Estoppel.

Any delay by City in instituting or prosecuting any actions or proceedings or otherwise asserting its rights shall not operate as a wavier of such rights or operate to deprive City of or limit such rights in any way. No waiver made by City with respect to any specific default by Developer shall be construed, considered or treated as a waiver of the rights of City with respect to any other defaults of Developer.

(h). Access to the Project.

Any duly authorized representative of the City shall, at all reasonable times, have access to the Project for the purposes of confirming the Developer's compliance with this Agreement.

(i). City's Right to Inspect Records.

Until the City issues its Certificate of Completion, the City shall have the right and authority to review and audit, from time to time, the Developer's

financial books and records relating to the Project and the Development Requirements including, without limitation, the Developer's loan statements, general contractor's sworn statements, general contracts, subcontractors, purchase orders, waivers of lien, paid receipts, and invoices. Upon reasonable notice which shall not be less than (30) days, all such books and other records shall be available at the offices of the Developer for inspection, audit and examination at all reasonable times by any duly authorized representative of the City.

7. NON-DISCRIMINATION.

Developer shall not discriminate against any employee or applicant for employment based upon race religion, color, sex, national origin or ancestry, age, handicap or disability, sexual orientation, military status, parental status or source of income.

All construction workers covered by this Agreement shall mean skilled construction workers, which include all worksite (working) foremen, journeymen, apprentices, trainees and helpers, where applicable.

Developer, in all solicitations or advertisements for employees placed by or on behalf of Developer, shall state that all qualified applicants shall receive consideration for employment without discrimination based upon race, religion, color, sex, national origin or ancestry, military status, parental status, sexual orientation, source of income, age, handicap or disability.

Developer shall include such provisions in every contract and shall require inclusion of these provisions in every subcontract and sub-subcontract entered into by its General Contractor so that each provision shall be binding upon the General Contractor and each subcontractor and each sub-subcontractor, as the case may be.

8. MISCELLANEOUS PROVISIONS.

(a). Entire Agreement.

Except as otherwise provided herein, this Agreement contains the entire agreement of the parties with respect to the Project and the Development Plans and supersedes all prior agreements, negotiations, and discussions with respect thereto, and shall not be modified, amended or changed in any material manner whatsoever except by the written agreement of the City and the Developer. The term "material" for the purposes of this Section 8(a) shall be defined as any deviation from the terms of this Agreement which operates to cancel or otherwise reduce any developmental, construction or job-creating obligation of the Developer by more than ten (10) percent, substantially changes the character of the Development Requirements or any activities undertaken by the Developer affecting the Development Requirements, or increases any time agreed for the

performance by City or the Developer by more than one hundred eighty (180) days.

(b). Assignability and Transfer.

Unless expressly permitted by the provisions of this Agreement, the Developer, until City issues the Certificate with respect to the Project, shall not assign, transfer or convey any right, title or interest in the Property or any of its duties or obligations under this Agreement as they relate to the Development Requirements or the land. Notwithstanding anything to the contrary herein, the Developer may assign this Agreement without the consent of City (but without release of the Developer from its obligations under this Agreement) to:

- Its parent company; or
- Any company which merges, consolidates or acquires substantially all of the assets of Developer, including the Project Area as a going concern; or
- An entity in which the Developer has a controlling interest of 51 % or more.

(c). Conflict of Interest - City's Representatives Not Individually Liable.

Developer covenants that, prior to the issuance of any Certificate of Completion by the City, no member of any city board, commission or agency, or official or employee of the City shall have any proprietary interest, direct or indirect, in the Developer, this Agreement, or the Development Requirements, nor shall any such member, official or employee participate in any decision relating to this Agreement which affects his or her personal interest or the interest of any corporation, partnership, or association in which he or she is directly or indirectly interested. No member, official, or employee of the City shall be personally liable to the Developer to perform any commitment or obligation of the City under this Agreement nor shall any such person be personally liable in the event of any default or breach by the City.

(d). Survival.

All representations and warranties contained in this Agreement are made as of the execution, delivery and acceptance hereof by City and the Developer and shall survive the execution, delivery and acceptance of this Agreement.

(e). Mutual Assistance.

The City and the Developer agree to perform their respective obligations, including the execution and delivery of any documents, instruments, petitions,

and certification, as may be necessary or appropriate, consistent with the terms and provisions of this Agreement.

(f). Cumulative Remedies.

The remedies of either party hereunder are cumulative and the exercise of anyone or more of the remedies provided by this Agreement shall not be construed as a waiver of any of the other remedies of such party unless specifically so provided herein.

(g). Limited Obligation.

The obligations of the City under this Agreement shall never constitute an indebtedness or a general obligation of the City within the meaning of the1970 Constitution of the State of Illinois or any statutory provisions and shall not constitute or give rise to a charge or lien against City's general credit or taxing power.

(h). Disclaimer.

No provision of this Agreement, nor any act of the City or the Developer, shall be deemed or construed by the City and the Developer, or by third persons, to create any relationship of third-party beneficiary, or of principal or agent, or of limited or general partnership, or of joint venture, or of any association or any other relationship involving City.

(i). DED's Authority.

The DED shall have authority to approve non-material changes to the Development Requirements and Plans and Specs and to waive nonmaterial deviations with respect to the requirements of this Agreement. No approvals or waivers shall be effective unless the same are in writing.

(j). Notices.

All notices to be served pursuant hereto shall be deemed properly delivered if delivered personally or by Federal Express or comparable "over night" courier service (which shall be deemed received on the date of delivery thereof), or served by United States certified or registered mail, postage prepaid (which shall be deemed received on the third (3rd) business day following the postmark date thereof), to the City or the Developer at the addresses set forth below or to such other addresses as City or the Developer may direct in writing:

If to the City: Mike Malloy
Director of Economic Development
10025 Bunkum Road
Fairview Heights, IL 62208

If to the Developer: Steven Giger
Perfect Finish, Inc.
10610 Lincoln Trail
Fairview Heights, Illinois 62208

(k). Headings.

The headings of the various sections and subsections of this Agreement have been inserted for convenient reference only and shall not in any manner be construed as modifying, amending, or affecting in any way the express terms and provisions hereof.

(l). Governing Law.

This Agreement shall be governed by and construed in accordance with the internal laws of the State of Illinois without regard for the conflict of laws provisions of such law or of the law of any other jurisdiction.

(m). Recordation of Agreement.

Without the express written consent of City, neither this Agreement nor any memorandum hereof shall be recorded in the Office of the Recorder of Deeds of St. Clair County, Illinois.

(n). Successors and Assigns.

The terms of this Agreement shall be binding upon City and the Developer and the Developer's legal representatives, successors and assigns. No contractor, subcontractor, material vendor, or laborer shall be deemed a third-party beneficiary of this Agreement.

(o). Counterparts.

Any number of counterparts of this Agreement may be signed on behalf of the City and the Developer, which counterparts, when fully executed, shall constitute but on and the same agreement.

(p). Severability.

It is understood and agreed by the parties hereto that if any part, term, or provision of this Agreement is held by a court of law to be illegal or in conflict with any law of the State of Illinois, the validity of the remaining portions or provisions

shall not be affected, and the rights and obligations of the parties shall be construed and enforced as if the Agreement did not contain the particular part, term or provisions held to be invalid.

IN WITNESS WHEREOF, the parties have executed or caused this Agreement to be executed, all as of the date first written above.

CITY OF FAIRVIEW HEIGHTS, ST. CLAIR COUNTY, ILLINOIS, a municipal corporation

By: _____
Mayor Mark T. Kupsky
Mayor, City of Fairview Heights

STEVEN GIGER and
PERFECT FINISH, INC.

By: _____
Steven Giger

By: _____
Perfect Finish, Inc.

Title: _____

STATE OF ILLINOIS)
) ss
COUNTY OF ST.CLAIR)

I,_____, a notary public in and for said County, in the State aforesaid, do hereby certify that Mark T. Kupsky personally known to me to be the Mayor of the City of Fairview Heights, St. Clair County, Illinois, a municipal corporation, and personally known to me to be the same person whose name is subscribed to the foregoing instrument, appeared before me this day in person and being first duly sworn by me acknowledged that as such Mayor, he signed and delivered the said instrument, pursuant to authority given by the City of Fairview Heights, as a free and voluntary act and as the free and voluntary act and deed of said City, for the uses and purposes therein set forth.

Given under my hand and notarial seal this ___ day of _____, 2016.

_____
Notary Public

My Commission Expires:

_____

RETURN TO AGENDA

STATE OF ILLINOIS)
) ss
COUNTY OF ST.CLAIR)

I, _____, a notary public in and for said County, in the State aforesaid, do hereby certify that Steven Giger, personally known to me to be the authorized representative of Perfect Finish, Inc. located at 10610 in Fairview Heights, Illinois, and personally known to me to be the same person whose name is subscribed to the foregoing instrument, appeared before me this day in person and being first duly sworn by me acknowledged that as such representative, he signed and delivered the said instrument, pursuant to authority given by said corporation, as his free and voluntary act and as the free and voluntary act and deed of said corporation, for the uses and purposes therein set forth.

Given under my hand and notarial seal this ___ day of _____, 2016.

_____
Notary Public

My Commission Expires:

_____

RETURN TO AGENDA

EXHIBIT A
DEVELOPMENT PLAN

RETURN TO AGENDA

Return to Agenda

Perfect Finish

10614 Lincoln Trail
Fairview Heights, IL 62208
Office (618) 398-3100
Fax (618) 398-4297
Email: perfect@peaknet.net

April 28, 2015

Subject: Proposed project at 10614 Lincoln Trail, Fairview Hts, IL

I am proposing to tear down the existing 2900 Square foot building located at 10614 Lincoln Trail, which is a shell only with no utilities and is currently used for storing vehicles. The condition of the building is poor and not worth renovating. We will construct a new 4800 square foot building which will be used as an extension of our current auto body repair shop located next door at 10610 Lincoln Trail. We will also be adding mechanical, possibly restoration work, and a car rental agency. The new building will be constructed of the same split faced block and design as our current building. We will also have adjoining parking lots which will give customers, employees and towing companies' better access to the property. I have also had an environmental study perfomed on both properties and was given a clean bill of health. We used this property from 1997-2005 for our body shop operations before we moved next door to our current location. I have financing approved through several local banks and can begin construction as soon as I am issued a building permit. I need business assistance monies to curb the high cost of construction. Business operation cost increase every year and we need the assistance to sustain our longevity in our business community. This project will enhance the look of this area tremendously. I've attached several photos of both our current body shop building and the building we will be replacing. Thank you for your consideration.

Sincerely,

Steve M. Giger
President and Manager, Perfect Finish

RETURN TO AGENDA

Return to Agenda

Strube Construction
2944 Renchler Rd
Belleville, IL 62221
618-580-1054

Stephen Strube, Owner

Dumpsters	$3500.00
Demolition	$20.985.00
Excavating & Concrete	$123,700.00
Masonry	$75,350.00
Plumbing	$29,500.00
Electric	$44,885.00
HVAC	$12,250.00
Painting	$25,380.00
Overhead doors/Entry doors	$8925.00
Aluminum Front & Windows	$6319.00
Roofing	$6705.00
Tin for shop ceiling	$6125.00
Lumber bid	$32,117.00
Retention Pond	$10,796.00
Crane Time	$3400.00
Lift time	$2600.00
Gutters	$3192.00
Insulation R38	$7230.00
Carpentry Labor	$40,500.00
Mark Up	$10,700.00
Fence	$13,550.00
Signs, Gate, Sign base	$10,500.00
Total	$498,209.00

CHARLES SUAREZ
COUNTY TREASURER
10 PUBLIC SQUARE
BELLEVILLE, IL 62220
www.co.st-clair.il.us

ST. CLAIR COUNTY
2014 REAL ESTATE TAXES
BASED ON ASSESSED VALUE
AS OF JANUARY 1, 2014

66184

PARCEL NO. 03-28.0-302-041

Pay on-line: www.co.st-clair.il.us/Pages/parcel.aspx
E-Mail: treasurer@co.st-clair.il.us

TAXING INFORMATION

FAIR PROPERTY VALUE		100,700
1977 BASE		4,636
SENIOR FREEZE BASE		0
ASSESSORS VALUE		34,182
BD OF REVIEW VALUE		34,182
TOWNSHIP MULTIPLIER	X	9819
LOCAL VALUE*	=	33,563
HE/DAV VALUE	-	0
VALUE TO BE EQUALIZED		33,563
STATE MULTIPLIER	X	1.0000
STATE EQUALIZED VALUE	=	33,563
OWNER OCCUPIED EXEMPTION	-	0
SENIOR FREEZE	-	0
SR HOMESTEAD EXEMPTION	-	0
RETURNING VET EXEMPTION	-	0
VET/DISABILITY EXEMPTION	-	0
FARM ASSESSMENT	+	0
TAXABLE VALUE	=	33,563
TOTAL TAX RATE	X	8.0972
TOTAL TAX DUE		$2,717.66

*ESTIMATED 1/3 OF FAIR PROPERTY VALUE

DISTRIBUTION OF 2014 TAXES

Taxing Body	2013 Rate	2013 Tax	2014 Rate	2014 Tax	Difference	% of Total
BELLEVILLE HS #201	1.97120	$673.80	2.03520	$683.07	9.27	25.13
GRANT DIST #110	3.91340	$1,337.68	4.00200	$1,343.19	5.51	49.42
SWIC DIST #522	0.41060	$140.35	0.42850	$143.82	3.47	5.29
CITY OF FAIRVIEW HTS	0.00000	$0.00	0.00000	$0.00	0.00	0.00
LINCOLN TRAIL REDEVELOPMENT PROJECT	0.00000	$0.00	0.00000	$0.00	0.00	0.00
ST CLAIR CO GEN	0.11240	$38.42	0.11590	$38.90	0.48	1.43
ST CLAIR CO OTHER	0.79560	$271.95	0.82290	$276.19	4.24	10.16
CASEYVILLE TWP	0.11450	$39.14	0.12150	$40.78	1.64	1.50
CASEYVILLE ROAD	0.10740	$36.71	0.11770	$39.50	2.79	1.45
FAIRV CASEY TWP FIRE	0.43430	$148.45	0.45350	$152.21	3.76	5.60
CITY OF FRVW HTS LIB	0.00000	$0.00	0.00000	$0.00	0.00	0.00
Totals	7.8594	$2,686.50	8.09720	$2,717.66	$31.16	

03-28.0-302-041
GIGER, STEVEN M & JENIFER A
GIGER STEVEN M & JENIFER A
101 MARILYN AVE
SWANSEA IL 62226-

Dear Taxpayer,
Please read your bill carefully. On or before the installment due date, pay the first amount shown on payment coupon. After the due date pay the amount that includes penalty. The dates below are important to you. Please read them carefully.

First Installment due date:	07/01/2015
Second Installment due date:	09/01/2015
Last day to pay and avoid publication:	09/25/2015

The credit card & E-Check systems will be temporarily shut down September 25 at 3:00pm until 8:00am September 28 2015

Notice of tax sale by certified mail:	10/02/2015
Publication of unpaid taxes:	10/06 - 10/09/2015
LAST DAY TO PAY TAXES:	11/06/2015

The credit card & E-Check services will be permanently shut down on November 6, 2015 at 3:00pm.
POSTMARK WILL NOT BE HONORED ON LAST DAY TO PAY
PAYMENTS MUST BE RECEIVED BEFORE 5 PM ON 11/06/2015
9:00 AM Tax Sale of all unpaid taxes. 11/09 - 11/12/2015
No payment will be taken during tax sale.
I remind you the County Treasurer only collects your taxes and is not responsible for your property assessment or the amount of tax you are paying

Legal Description
ST CLAIR HILLS
ST CLAIR HILLS
LOT/SEC-23 PT LT 22 & PT LT 23 DOC A02370319

ACRES
0.00

Location of Property
10614 LINCOLN TR
FAIRVIEW HEIGHTS, IL 62208-0000

TWP:	CASEYVILLE
TAX CODE	08064
UNIT:	0060

YOUR CANCELLED CHECK WILL SERVE AS YOUR RECEIPT. PLEASE KEEP FOR YOUR RECORDS

1st INST:	2nd INST:
DATE PAID:	DATE PAID: AUG 24 '15
AMT. PAID:	AMT. PAID: $1358.83

RETURN TO AGENDA

Return to Agenda

Lincoln Trail TIF Corridor – Façade & Site Improvement Program
Appendix 5, Nov. 2014

Lincoln Trail Corridor Development Standards – Checklist

See the Development Design Standards for a description of each of the following improvement items.

A. EXTERIOR BUILDING ELEMENTS

1. **WALLS** - Changes to exterior wall materials/colors ☑
2. **PARAPET WALLS** -Addition of ornamental/architectural panels to emulate parapet walls ☐
3. **BUILDING FAÇADES** - Articulating building facades for functional/visual architectural interest ☑
4. **ARCHITECTURAL ORNAMENTATION** - Addition of exterior building elements (faux columns/beams, etc.) to break up long homogeneous facades ☑
5. **ROOFING** - Changes to exterior roof materials/colors ☑
6. **DOORS & WINDOWS** - Adding and/or enhancing doors and windows ☑
7. **AWNINGS** - Addition of architecturally compatible awnings ☑
8. **SHUTTERS** - Addition of architecturally compatible shutters ☐
9. **BUILDING FAÇADE LIGHTING** – Addition of architectural façade lighting. ☑
10. **EQUIPMENT SCREENING** - Screening visual clutter on roofs such as HVAC Units, cooler towers or electrical equipment. ☐

B. SITE ENHANCEMENT ELEMENTS

11. **PARCEL ASSEMBLY** ☐
12. **STRUCTURE DEMOLITION** ☑
13. **DRIVEWAYS** - Sharing of Driveways and/or reducing curb cut widths ☑ X
14. **PERIMETER LANDSCAPE** – For aesthetics and screening of parking lots and service areas ☐
15. **PARKING LOT LANDSCAPE** - Landscape islands on the interior of parking lots ☐ ?
16. **PARKING LOT LIGHTING** ☑
17. **PERMEABLE PAVEMENTS** ☑ ?
18. **SIDEWALKS** - Installation of sidewalks in ROW and/or sidewalk connection from ROW sidewalk to front door. ☐
19. **BUILDING ENTRY AREAS** – Developing pedestrian areas at building entrances with color and/or imprinted paving or pavers. ☐
20. **BUILDING ENTRY LANDSCAPE PLANTINGS** - Addition of landscape plantings (above ground or in-ground) at building entrances ☐
21. **FLAG POLES AND SITE FURNISHINGS** ☐
22. **WATER FEATURES** ☐
23. **UNDERGROUNDING UTILITIES** - Placement of utilities underground ☑ ?

C. SIGNING

24. **BUILDING SIGNS** - Addition of signing compatible with building architecture ☑ ok
25. **SITE SIGNS** - Site signage enhancements ☑ ?ok
26. **SIGN REMOVAL** - Removal of pole signs ☑ ?ok

10

10

needs 12

Lincoln Trail TIF Corridor – Façade & Site Improvement Program
Appendix 5, Nov. 2014

TOTAL NUM BER OF IMPROVEMENT ITEMS CHECKED.....

D. POSSIBLE FUNDING(1) (TOTAL PROJECT COST NOT TO EXCEED $150,000)

# of improvements checked
Make Improvements (10) – potential 50% funding from City
Make Improvements (9) – potential 45% funding from City
Make Improvements (8) – potential 40% funding from City
Make Improvements (7) – potential 35% funding from City
Make Improvements (6) – potential 30% funding from City
Make Improvements (5) – potential 25% funding from City
Less than 4- No City Funding

E. POSSIBLE FUNDING (TOTAL PROJECT COST BETWEEN $150,001 AND $300,000)

Make no less than 8 improvements – 25% funding from City

F. POSSIBLE FUNDING (TOTAL PROJECT COST BETWEEN $300,001 AND $500,000)

Make no less than 10 improvements – 15% funding from City

G. POSSIBLE FUNDING (TOTAL PROJECT COST EXCEEDS $500,000)

Make no less than 12 improvements – 10% funding from City, not to exceed $75,000.

[1]*City financial participation shall require compliance with prevailing wage rate ordinance, lowest responsible bidder ordinance; individual phases of a project can be considered separately.*

Lincoln Trail TIF Corridor – Façade & Site Improvement Program
Appendix 5, Nov. 2014

TOTAL NUM BER OF IMPROVEMENT ITEMS CHECKED.....

D. POSSIBLE FUNDING(1) (TOTAL PROJECT COST NOT TO EXCEED $150,000)

# of improvements checked
Make Improvements (10) – potential 50% funding from City
Make Improvements (9) – potential 45% funding from City
Make Improvements (8) – potential 40% funding from City
Make Improvements (7) – potential 35% funding from City
Make Improvements (6) – potential 30% funding from City
Make Improvements (5) – potential 25% funding from City
Less than 4- No City Funding

E. POSSIBLE FUNDING (TOTAL PROJECT COST BETWEEN $150,001 AND $300,000)
Make no less than 8 improvements – 25% funding from City

F. POSSIBLE FUNDING (TOTAL PROJECT COST BETWEEN $300,001 AND $500,000)
Make no less than 10 improvements – 15% funding from City

G. POSSIBLE FUNDING (TOTAL PROJECT COST EXCEEDS $500,000)
Make no less than 12 improvements – 10% funding from City, not to exceed $75,000.

[1]*City financial participation shall require compliance with prevailing wage rate ordinance, lowest responsible bidder ordinance; individual phases of a project can be considered separately.*

RETURN TO AGENDA

Return to Agenda

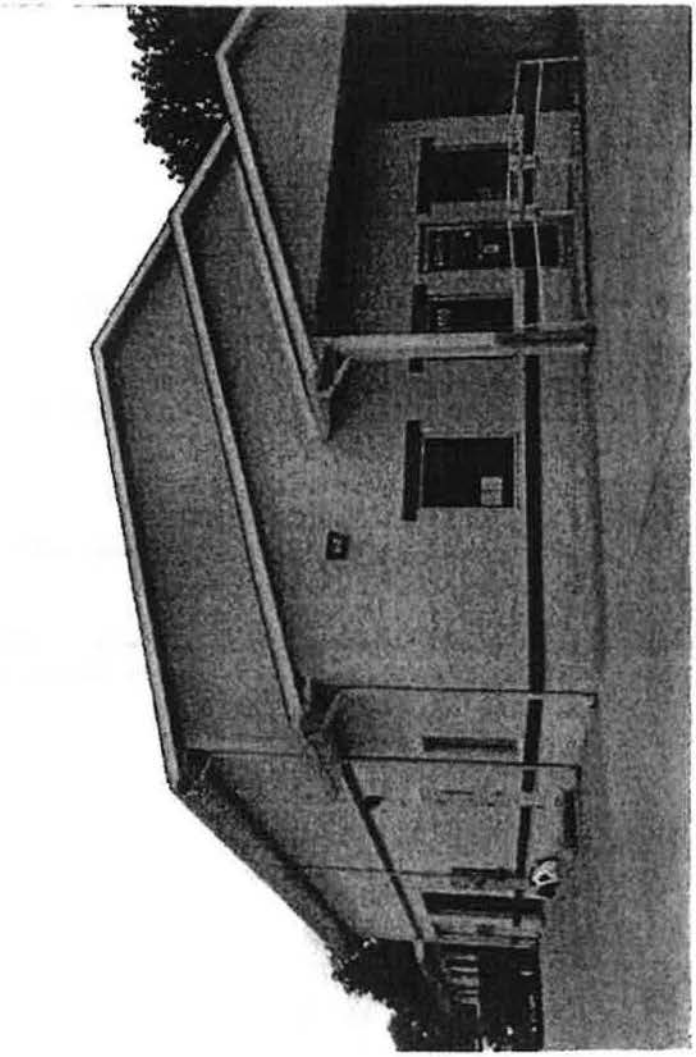

RETURN TO AGENDA

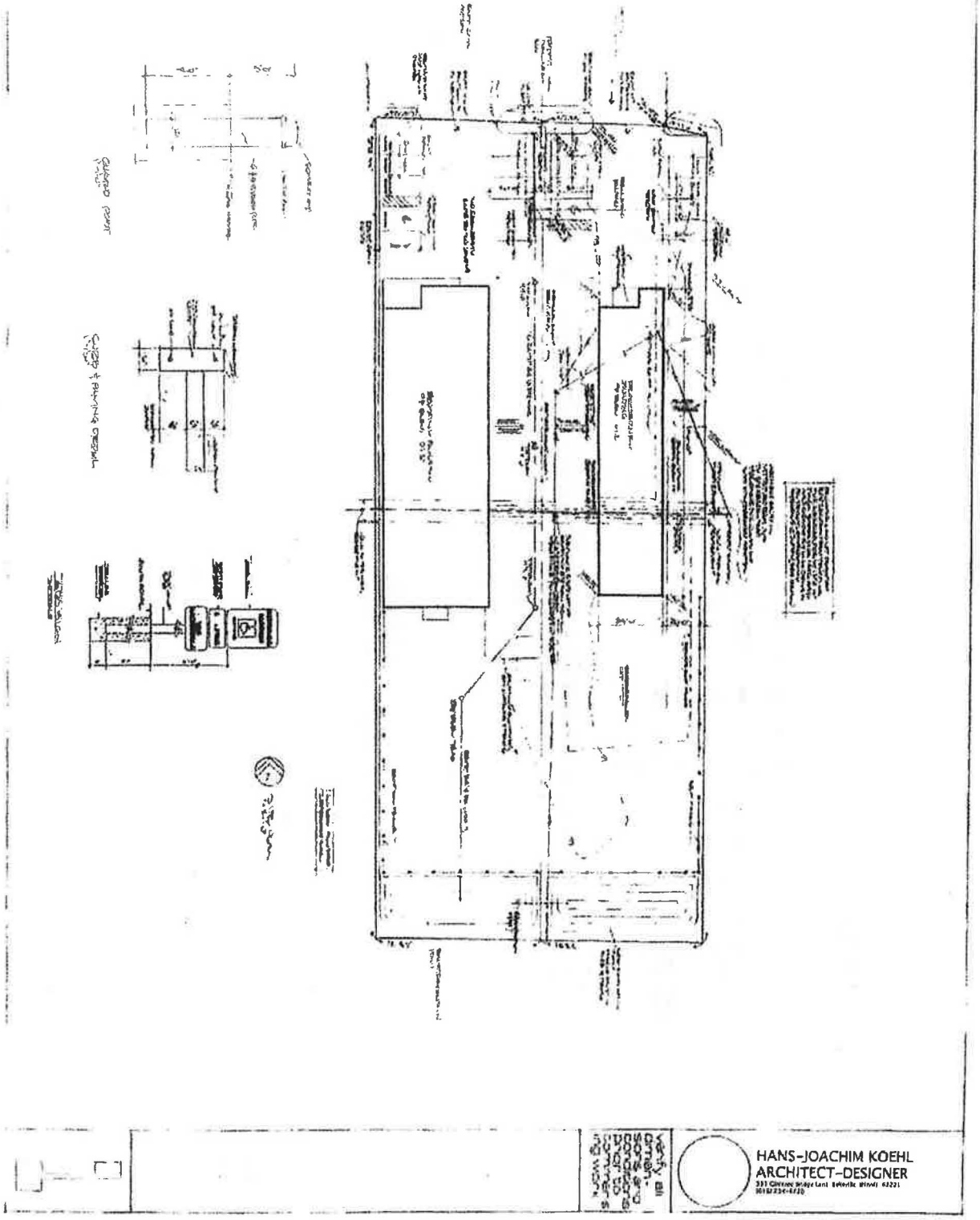

Return to Agenda

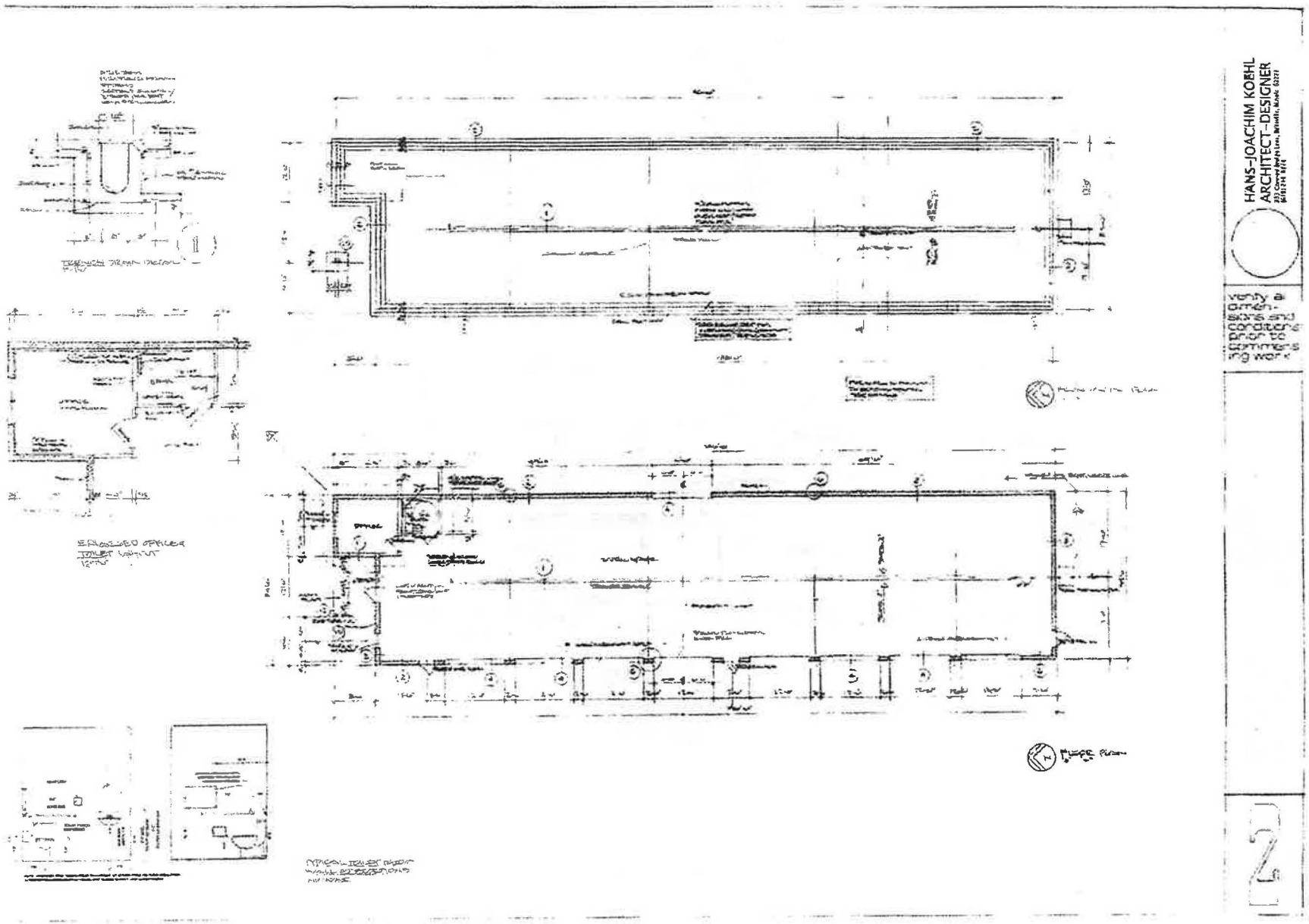

Return to Agenda

RETURN TO AGENDA

RETURN TO AGENDA

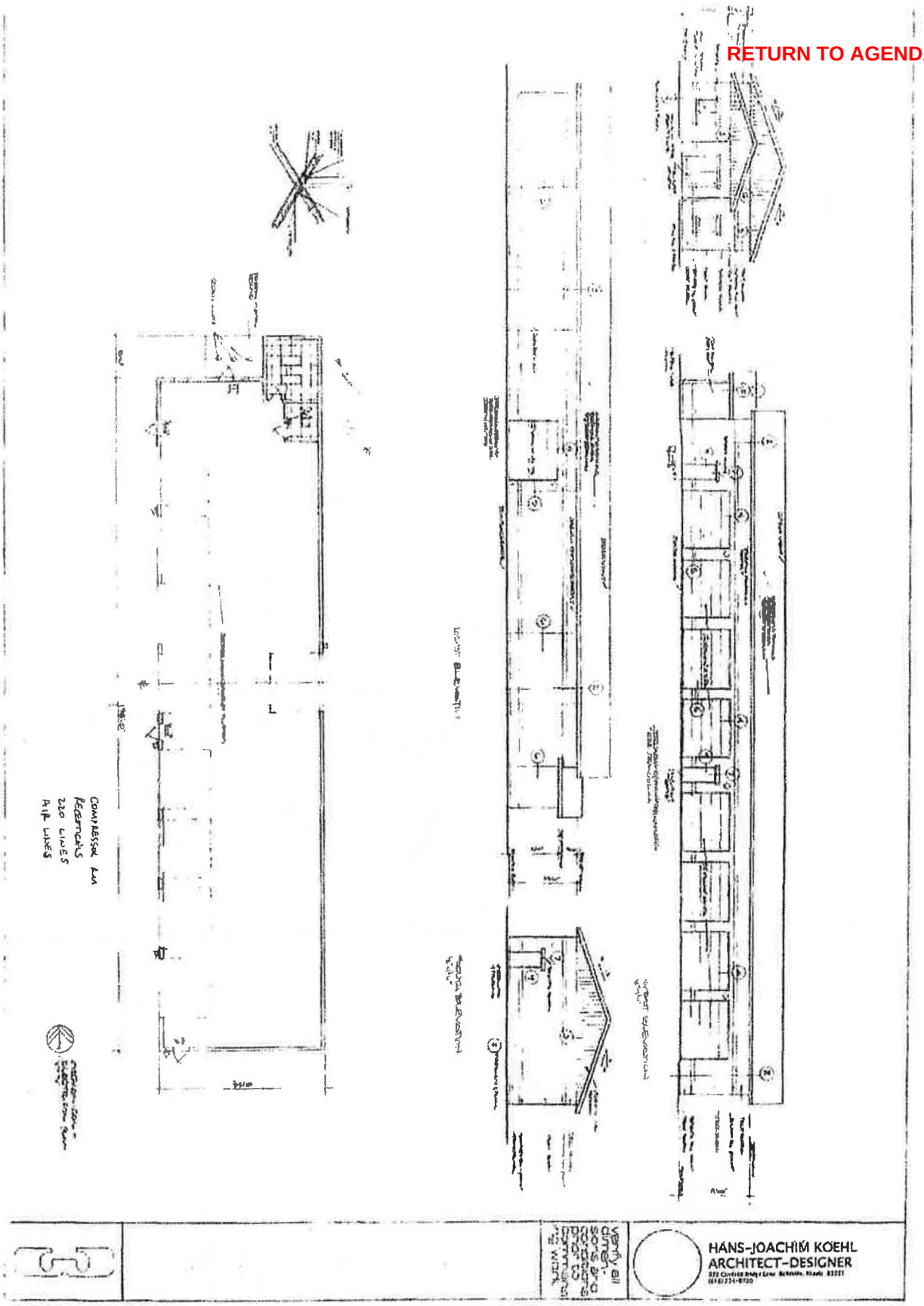

Return to Agenda

Return to Agenda

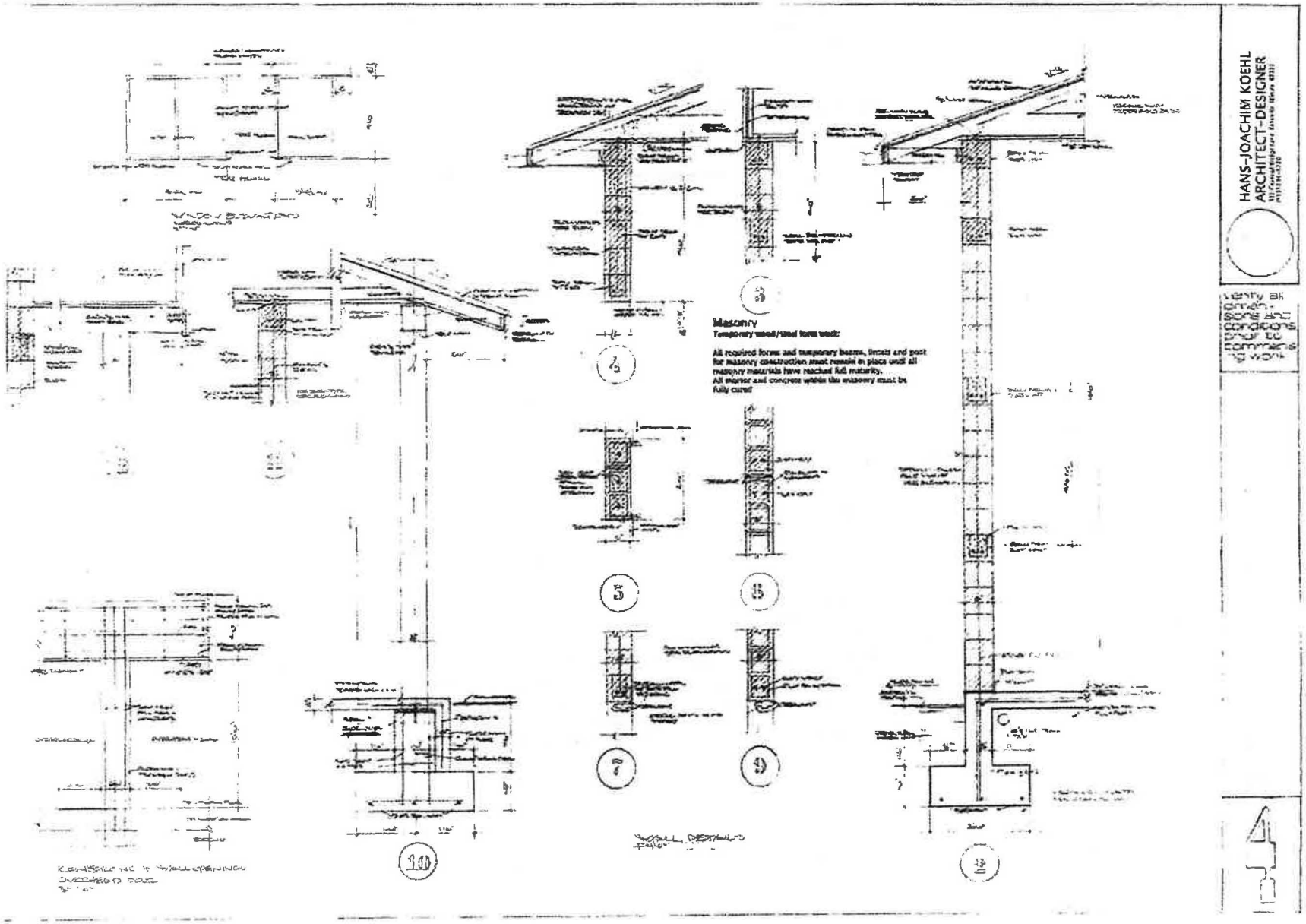

RETURN TO AGENDA

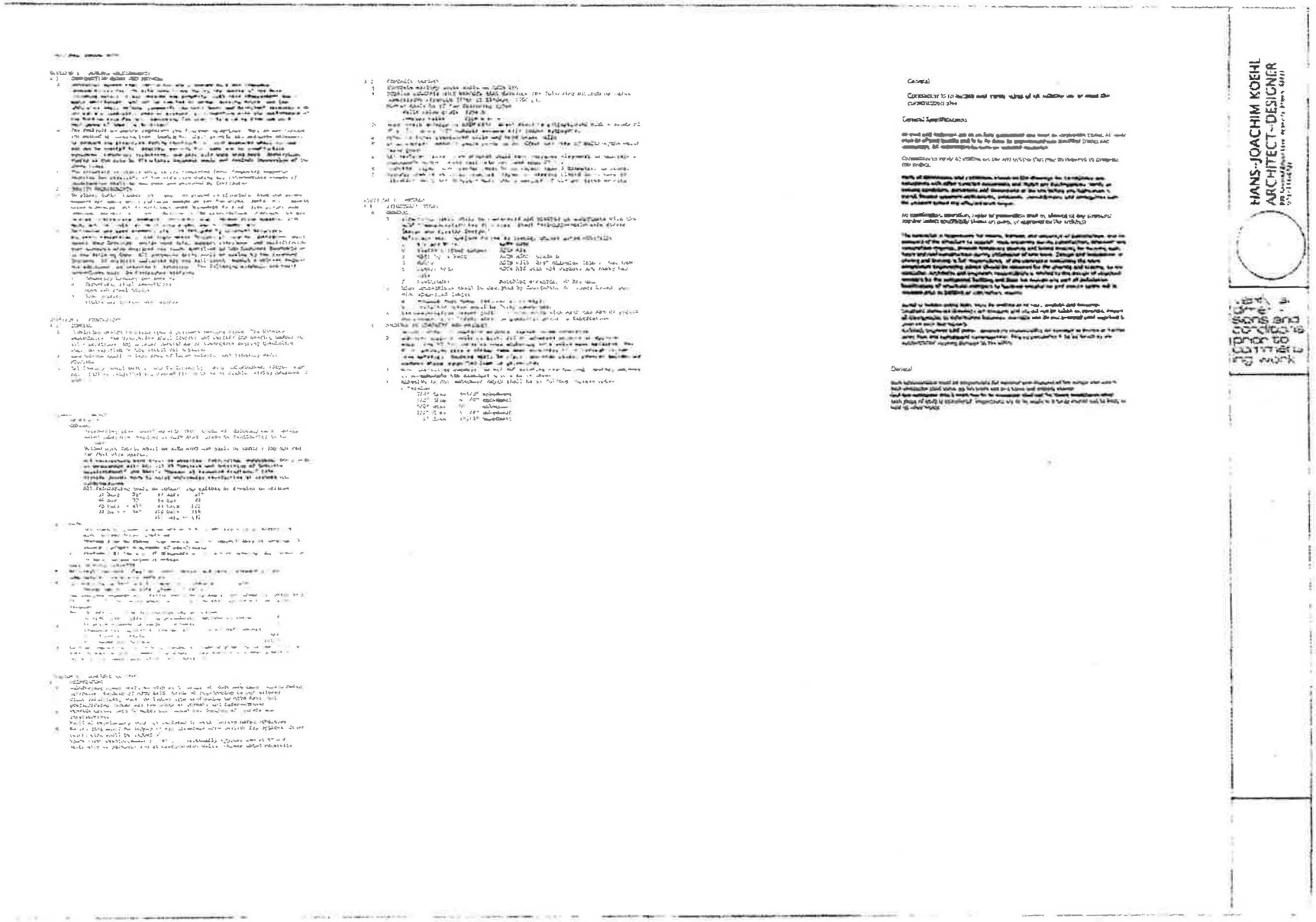
HANS-JOACHIM KOEHL
ARCHITECT--DESIGNER

RETURN TO AGENDA

EXHIBIT B
DEVELOPMENT AGREEMENT REPORTING FORM

RETURN TO AGENDA

City of Fairview Heights, Illinois

Development Agreement
Reporting Form*
Year,_____

A.Project #_____

B. Name of Project _____

C. Owners of Project _____

D.Address of Project _____

E.Total Private Investment Required_____

F.Total Private Sector Investment Made_____

G.Total $'s Infused into Project by City_____

H.Payment Schedule of City per $ Amount and Dates(s)_____

I.Completion Date of Project _____

J. Number of full time equivalent (FTE) jobs retained ,if required,in Development Agreement___
(Attach list of retained employees)

RETURN TO AGENDA

K. Number of full time equivalent (FTE) jobs created, if required. in Development Agreement___
(Attach list of new employees)

L. Amount of Sales Required to be Generated $_____in year___,____,____,___

M. Amount of Sales Generated $ _____ in year___,____,____,___
(Attach documentation of annual sales)

I (We) hereby submit the above information as true and correct.

_____	_____	_____
Name	Title	Date
_____	_____	_____
Name	Title	Date

*City Reserves Right To Request Additional Information Subject To the Content of any specific Development Agreement

RETURN TO AGENDA

EXHIBIT C
REIMBURSEMENT OR PAYMENT REDUCTION FORMULA

RETURN TO AGENDA

Examples of Payment Reductions

Should Terms and Conditions of Development Agreement Not Be Met

A. $5,000,000.00 of sales required annually
$4,500,000.00 of sales occurred
$500,000.00 short fall

$4,500,000 / $5,000,000 = 90% of sales requirement met

$23,214.00 1st year rebate in agreement
X .90%
$20,892.50 1st year revised rebate paid to Developer

B. $464,295.00 of private investment required

$450,000.00 of private investment made
$14,295.00 shortfall

$450,000.00 / $464,295.00 = 96.9%

100 – 96.9 = 3.1% Reduction in Rebate

C. 16 jobs required to be created 1st year
14 jobs created
2 jobs shortfall

14 / 16 = 87.5%

100 – 87.5% = 12.5% Rebate in Rebate 1st year

$23,214.00 1st year rebate in agreement
X .875%
$20,312.25 1st revised rebate to developer

D. 10 years required to be open
8 years in operation
2 year shortfall
8 / 10 = 80%

100 – 80 = 20% of rebate to be paid back by Developer

$69,644.00 Total rebate in agreement paid to Developer
X .80%
$55,715.20

RETURN TO AGENDA

$69,644.00
-$55,715.20
$13,928.80 Developer pays back to City

Note: Should more than 1 requirement not be met, the applicable %'s shall be applied in each instance.

(1) Not Inclusive; other requirements not being met would be calculated using a similar method.

RETURN TO AGENDA

PROPOSED RESOLUTION NO. 32-'16

A RESOLUTION AUTHORIZING THE MAYOR TO ENTER INTO AN AGREEMENT WITH THE CITY OF O'FALLON FOR THE PROVISION OF 911 CERTIFIED DISPATCH STAFFING ON AN AS NEEDED BASIS.

WHEREAS, the City of Fairview Heights and the City of O'Fallon desire to enter into an intergovernmental agreement requiring O'Fallon to provide necessary 911 certified and trained dispatch staff, as needed by Fairview Heights, from time to time, to provide its police department dispatch services, at the expense of Fairview Heights.

WHEREAS, the parties hereto have the authority to enter into a Police Department Dispatch Intergovernmental Agreement for the proper purposes of their respective governments, and specifically to facilitate the operation and staffing necessary for Fairview Heights' police dispatch services pursuant to the agreement attached hereto, made a part hereof and marked "EXHIBIT A."

NOW, THEREFORE, BE IT RESOVED BY THE CITY COUNCIL OF THE CITY OF FAIRVIEW HEIGHTS, ILLINOIS:

That the Mayor is hereby authorized to enter into a Police Department Dispatch Intergovernmental Agreement with the City of O'Fallon to provide necessary 911 certified and trained dispatch staff, as needed by the Fairview Heights Police Department, from time to time, to provide its police department dispatch services, at the expense of Fairview Heights pursuant to the Police Department Dispatch Intergovernmental Agreement attached hereto, made a part hereof and marked "EXHIBIT A."

This Resolution shall be in full force and effect from and after its passage and approval as provided by law.

PASSED:

APPROVED:

_____
MARK T. KUPSKY – MAYOR
CITY OF FAIRVIEW HEIGHTS

ATTEST:

_____
KAREN J. KAUFHOLD – CITY CLERK

RETURN TO AGENDA

"EXHIBIT A"

POLICE DEPARTMENT DISPATCH INTERGOVERNMENTAL AGREEMENT

This Police Department Dispatch Intergovernmental Agreement ("Agreement") is entered into as of this ___ day of _____, 2016, by and between the CITY OF FAIRVIEW HEIGHTS, ILLINOIS (hereinafter referred to as "Fairview Heights") and the CITY OF O'FALLON, ILLINOIS (hereinafter referred to as "O'Fallon").

WITNESSETH

WHEREAS, pursuant to Article VII, Section 10 of the Constitution of the State of Illinois of 1970, together with the powers and authority granted to the parties under the Intergovernmental Cooperation Act (5 ILCS 220/1 et seq.), the parties hereto have the authority to enter into this Police Department Dispatch Intergovernmental Agreement for the proper purposes of their respective governments, and specifically to facilitate the operation and staffing necessary for Fairview Heights' police dispatch services; and

WHEREAS, Fairview Heights and O'Fallon desire to enter into an intergovernmental agreement requiring O'Fallon to provide necessary 911 certified and trained dispatch staff, as needed by Fairview Heights, from time to time, to provide its police department dispatch services, at the expense of Fairview Heights as more fully set forth herein.

NOW, THEREFORE, in consideration of the mutual promises, terms, covenants, and conditions set forth herein, the parties agree as follows:

1. Purpose. This Agreement formalizes relationships between the participating entities in order to insure that Fairview Heights maintains adequate personnel necessary to provide police dispatch services; and contemplates that O'Fallon will, from time to time, assist Fairview Heights in providing it necessary staff to provide said services. This program shall be referred to as the "Police Dispatcher on Loan Program" or "PDLP".

2. Structure.

A. Composition. The PDLP will initially consist of one (1) part-time dispatch employee, with 911 certification and training completion, selected by O'Fallon City Police Department pursuant to existing requirements as set forth by O'Fallon City Police Department and Fairview Heights City Police Department Rules and Regulations, who shall work for Fairview Heights no more than twenty-eight (28) hours in any seven (7) day period.

B. Supervision. On a day-to-day basis the PDLP employee will follow the operational procedures and scheduling directives of the Fairview Heights City Police Department. For all other purposes, the employee assigned to Fairview Heights shall be considered to be an employee of O'Fallon and shall be subject to its control, supervision and terms and conditions of employment.

RETURN TO AGENDA

C. Relationship of Parties. The PDLP dispatch employee shall have the status of an independent contractor to Fairview Heights for purposes of this Agreement. The assigned employee will be subject to current procedures in effect for certified 911 dispatch employees, including, but not limited to, attendance at all authorized training. This Agreement is not intended to and will not constitute, create, give rise to, or otherwise recognize a joint venture, partnership, or formal business association or organization of any kind between the parties, and the rights and obligations of the parties shall be only those expressly set forth in this Agreement. The parties agree that no person supplied by O'Fallon to accomplish the goals of this Agreement is a Fairview Heights employee for any purpose and that no rights under the Fairview Heights City employment, retirement, or personnel rules accrue to such person.

3. Selection. When a PDLP position becomes available, Fairview Heights will notify O'Fallon of the vacancy and it will be staffed by O'Fallon according to the requirements and guidelines contained in this Agreement.

4. Reimbursement/Compensation. As sole reimbursement/compensation for the dispatch services provided under this Agreement, Fairview Heights shall pay to O'Fallon an amount equivalent to the same part-time pro rata share of the cost of the salary and benefits otherwise payable to a full-time dispatch employee of O'Fallon, which amount shall be determined by O'Fallon and paid by Fairview Heights quarterly, commencing three (3) months after date of assignment.

5. Term of the Agreement/Termination. This Agreement shall continue unless cancelled by either party with thirty (30) days written notice.

6. Strict Compliance. No failure by either party to insist upon the strict performance of any covenant, term or condition of this Agreement, or to exercise any right or remedy upon a breach thereof, shall constitute a waiver of any such breach or any subsequent breach of such covenant, term or condition. No waiver of any breach shall affect or alter this Agreement, but each and every covenant, term and condition of this Agreement shall continue in full force and effect.

7. Notice. All notices, requests, approvals, demands and other communications required or permitted to be given under this Agreement shall be in writing and shall be deemed to have been duly given and to be effective when delivered personally (including delivery by express or courier service) or, if mailed, three (3) business days after being deposited in the United States mail as registered or certified matter, postage prepaid, return receipt requested, addressed as follows or to such other address as either party may designate by notice to the other party in accordance with this Paragraph 7:

If to O'Fallon: O'Fallon Police Department
Attn: Chief of Police
285 N. Seven Hills Road
O'Fallon, Illinois 62269

RETURN TO AGENDA

If to Fairview Heights: Fairview Heights Police Department
Attn: Chief of Police
10027 Bunkum Road
Fairview Heights, Illinois 62208

8. Amendments. Neither this Agreement nor any term or provision hereof may be changed, waived, discharged or terminated, except by an instrument in writing signed by both of the parties hereto.

9. Captions. The captions to this Agreement are for convenience of reference only and in no way define or limit the scope or intent of this Agreement.

10. Controlling Law. This Agreement shall be interpreted and construed in accordance with the laws of the State of Illinois.

11. Severability. If, for any reason, any clause or provision of this Agreement, or the application of any clause to a particular context or to a particular situation, circumstance or person, should be held unenforceable, invalid or in violation of law by any court or other tribunal, the application of such clause or provision in other contexts or to other situations, circumstances or persons shall not be affected thereby, and the remaining clauses and provisions hereof shall remain in full force and effect.

12. Entire Agreement. This Agreement constitutes the entire agreement between the parties hereto with respect to the subject matter hereof and any and all prior correspondence, conversations or memoranda are merged herein.

13. Nonexclusive Agreement. This Agreement is independent of, and in addition to, any other contracts or mutual agreements between the parties and to any other contracts or agreements to which Fairview Heights and O'Fallon, or either of them is a party.

Executed this ___ day of _____, 2016.

CITY OF FAIRVIEW HEIGHTS, ILLINOIS

By: _____
Mayor

ATTEST:

_____
City Clerk

CITY OF O'FALLON, ILLINOIS

By: _____
Mayor

ATTEST:

_____
City Clerk

RETURN TO AGENDA

PROPOSED RESOLUTION NO. 33-'16

A RESOLUTION AMENDING RESOLUTION NO. 3992-2016, PASSED FEBRUARY 16, 2016 AND APPROVED FEBRUARY 18, 2016; A RESOLUTION AUTHORIZING THE MAYOR TO ENTER INTO AN AGREEMENT WITH MOTOROLA SOLUTIONS, INC. FOR THE PURCHASE OF DISPATCH RADIO CONSOLES FOR USE BY THE FAIRVIEW HEIGHTS POLICE DEPARTMENT.

WHEREAS, the Fairview Heights Police Department has continued to negotiate the price of the Dispatch Radio Consoles and labor.

WHEREAS, through negotiations and review of the equipment originally proposed, the cost of the project for the Fairview Heights Police Department has been reduced.

WHEREAS, Motorola Solutions, Inc. 1301 East Algonquin Road, Schaumburg, IL 60196 has submitted an invoice to replace the Radio Consoles in the amount of ONE HUNDRED TWENTY THOUSAND SIXTY DOLLARS AND THIRTY FIVE CENTS ($120,060.35).

WHEREAS, funds to complete the purchase of the Radio Consoles is within the City of Fairview Heights Budget for FY 2015-2016.

NOW, THEREFORE, BE IT RESOLVED BY THE CITY COUNCIL OF THE CITY OF FAIRVIEW HEIGHTS, ILLINOIS:

That the Mayor be and is hereby authorized to enter into an agreement with Motorola Solutions, Inc., 1301 East Algonquin Road, Schaumburg, IL 60196 for the purchase of Radio Consoles pursuant to the invoice attached hereto, made a part hereof and marked "EXHIBIT A."

RETURN TO AGENDA

This Resolution shall be in full force and effect from and after its passage and approval as provided by law.

PASSED:

APPROVED:

_____
MARK T. KUPSKY - MAYOR
CITY OF FAIRVIEW HEIGHTS

ATTEST:

_____
KAREN J. KAUFHOLD - CITY CLERK

"EXHIBIT A"

RETURN TO AGENDA

MOTOROLA

MOTOROLA SOLUTIONS, INC.
1301 E. Algonquin Road
Schaumburg, IL 60196

Visit our website at :www.motorolasolutions.com

INVOICE

TOTAL INVOICE AMOUNT:	$120,060.35
MOTOROLA INVOICE NUMBER:	41220986
INVOICE DATE:	03/31/2016
PAYMENT DUE:	PER CONTRACT
CUSTOMER ACCOUNT NUMBER:	1035678038 0014
PURCHASE ORDER DATE:	
YOUR PURCHASE ORDER NUMBER:	CONTRACT

BILL TO ST CLAIR COUNTY

101 S FIRST ST
BELLEVILLE, IL 62220

For questions concerning this Invoice please contact
Motorola at: 1-888-567-7347

00059-00053-00043
Payment Terms: LARGE CONTRACT
Sales Order Number: 0609021750241

Motorola Solutions, Inc. Federal Tax Id: 36-1115800

Invoice Detail

Item	Model Number	Qty	Description	Unit Price	Amount
1		1	PARTIAL BILLING FOR 25% OF SYSTEM PRICE DUE UPON CONTRACT EXECUTION	120,060.35	120,060.35
2			AGENCY: FAIRVIEW HEIGHTS		
3			EQUIPMENT: $102,644.35		
4			INSTALLATION: $17,416.00		
			IF YOU HAVE ANY QUESTIONS REGARDING THIS INVOICE PLEASE CONTACT KERI BUTHMAN @847-576-6024 OR EMAIL: KERI.BUTHMAN@MOTOROLASOLUTIONS.COM THANK YOU FOR CHOOSING MOTOROLA SOLUTIONS, INC. INVOICE DUE PER TERMS OF CONTRACT - NET 30 CANCELS AND SUPERCEDES INVOICE 41218901		
			SUBTOTAL		120,060.35

(Continued on Next Page)

Detach here and return bottom portion with your payment

Payment Coupon

INVOICE NUMBER	CUSTOMER ACCOUNT NUMBER	PAYMENT DUE
41220986	1035678038 0014	PER CONTRACT

Invoice Total	Amount Paid
$120,060.35	

Please put your Invoice Number and your Customer Account Number on your check for prompt processing

ST CLAIR COUNTY

101 S FIRST ST
BELLEVILLE, IL 62220

Send Payment To:

MOTOROLA

MOTOROLA SOLUTIONS, INC.
13108 COLLECTIONS CENTER DRIVE
CHICAGO, IL 60693

0401020200090806 1035678038 0014 0000 033116 0012006035 00

RETURN TO AGENDA

MOTOROLA

MOTOROLA SOLUTIONS, INC.
1301 E. Algonquin Road
Schaumburg, IL 60196

Visit our website at :www.motorolasolutions.com

INVOICE

TOTAL INVOICE AMOUNT:	$120,060.35
MOTOROLA INVOICE NUMBER:	41220986
INVOICE DATE:	03/31/2016
PAYMENT DUE:	PER CONTRACT
CUSTOMER ACCOUNT NUMBER:	1035678038 0014
PURCHASE ORDER DATE:	
YOUR PURCHASE ORDER NUMBER:	CONTRACT

BILL TO ST CLAIR COUNTY

101 S FIRST ST
BELLEVILLE, IL 62220

For questions concerning this Invoice please contact
Motorola at: 1-888-567-7347

00060-00053-00043
Payment Terms: LARGE CONTRACT
Sales Order Number: 0609021750241

Motorola Solutions, Inc. Federal Tax Id: 36-1115800

Invoice Detail Continued

Item	Model Number	Qty	Description	Unit Price	Amount
			PLEASE PAY THIS AMOUNT (PAYMENT DUE: PER CONTRACT)		120,060.35

RETURN TO AGENDA

		FAIRVIEW HEIGHTS, IL - 2 OPs
QTY	MODEL	DESCRIPTION
1	B1905	MCC 7500 ASTRO 25 SOFTWARE
2	B1933	MOTOROLA VOICE PROCESSOR MODULE
2	CA01642AA	ADD: MCC 7500 BASIC CONSOLE FUNCTIONALITY SOFTWARE LICENSE
2	CA01644AA	ADD: MCC 7500 /MCC 7100 ADV CONVL OPERATION
2	CA01643AA	ADD: MCC 7500 / MCC 7100 TRUNKING OPERATION
2	CA00140AA	ADD: AC LINE CORD, NORTH AMERICAN
2	TT2833	COMPUTER, Z440 WORKSTATION WINDOWS 7 (NON RETURNABLE)
2	T7449	WINDOWS SUPPLEMENTAL TRANS CONFIG
2	BLN6200	AC POWER STRIP, 6 OUTLET
4	B1912	MCC SERIES DESKTOP SPEAKER
2	B1914	MCC SERIES DESKTOP GOOSENECK MICROPHONE
4	B1913	MCC SERIES HEADSET JACK
4	RLN6098	HDST MODULE BASE W/PTT, 15' CBL
6	RMN5078B	SUPRAPLUS NC SINGLE MUFF HEADSET
2	DSTWIN6328A	PROVIDES ONE DUAL PEDAL FOOTSWITCH FOR USE WITH MOTOROLA MCC 7500 DISP
2	T7885	MCAFEE WINDOWS AV CLIENT
1	CLN1856	2620-24 ETHERNET SWITCH ?
1	SQM01SUM0205	GGM 8000 GATEWAY
1	CA01616AA	ADD: AC POWER
1	CA02086AA	ADD: HIGH DENSITY ENH CONV GATEWAY
1	F4543	SITE MANAGER BASIC
1	VA00874	ADD: AUX I-O SERV FW CURR ASTRO REL
1	V266	ADD: 90VAC TO 260VAC PS TO SM
3	V592	AAD TERM BLCK & CONN WI
		BACKUP CONTROL STATION ANTENNAS

2	DSMFBW7463	WIDEBAND FIBERGLASS OMNI ANTENNA 746-869 NFM BULKHEAD
50	L1700	FSJ1-50A CABLE: 1/4" SUPERFLEX POLY JKT PER FOOT
16	DDN9769	TRANSMISSION LINE,F1TNM-HC 1/4IN TY
2	DSISB50HNC2MA	RF SPD, 125-1000MHZ DC BLOCK BULKHEAD MT NM ANTENNA, NF EQUIPMENT SIDE
4	DDN1088	L4TNM-PSA TYPE N MALE PS FOR 1/2 IN CABLE
2	TDN9289	221213 CABLE WRAP WEATHERPROOFING
200	L1705	LDF4-50A CABLE: 1/2" LDF HELIAX POLY JKT PER FOOT
2	DSSG1206B2A	SG12-06B2A 1/2IN SURE GROUND GROUNDING KIT
2	DSL4SGRIP	L4SGRIP SUPPORT HOIST GRIP 1/2" LDF
2	DSGSAKITD	GROUND STRAP KIT - DIN

RETURN TO AGENDA

PROPOSED RESOLUTION NO. 34-'16

A RESOLUTION AUTHORIZING THE CITY TO ALLOCATE $16,500.00 TO THE METRO EAST CHAMBER OF COMMERCE FOR PHASE II OF THE FAIRVIEW HEIGHTS AUDIENCE EXTENSION RETARGETING CAMPAIGN.

WHEREAS, the Administration Committee on April 13, 2016 reviewed and recommended the City expend SIXTEEN THOUSAND FIVE HUNDRED DOLLARS ($16,500.00) for Phase II of the Fairview Heights Audience Extension Retargeting Campaign.

WHEREAS, the City of Fairview Heights wishes to better identify the regions that visitors to Fairview Heights emanate from.

NOW, THEREFORE, BE IT RESOLVED BY THE CITY COUNCIL OF THE CITY OF FAIRVIEW HEIGHTS, ILLINOIS:

That the City is hereby authorized to provide SIXTEEN THOUSAND FIVE HUNDRED DOLLARS ($16,500.00) of 2016 Hotel/Motel funds to the Metro East Regional Chamber of Commerce for Phase II of the Fairview Heights Audience Extension Retargeting Campaign.

This Resolution shall be in full force and effect from and after its passage and approval as provided by law.

PASSED:

APPROVED:

MARK T. KUPSKY – MAYOR
CITY OF FAIRVIEW HEIGHTS

ATTEST:

KAREN J. KAUFHOLD – CITY CLERK

PROPOSED RESOLUTION NO. 35-'16

RETURN TO AGENDA

A RESOLUTION AUTHORIZING THE MAYOR TO ENTER INTO A CONTRACT ON BEHALF OF THE CITY OF FAIRVIEW HEIGHTS WITH ROOTERS ASPHALT FOR ASPHALT RESURFACING OF ROADWAYS LOCATED IN WEINEL HILLS.

WHEREAS, the City has advertised for bids for labor, materials, and equipment in connection with asphalt resurfacing of Estates View Drive, Patricia Drive, Clark/Rebecca Drive, Weslake Drive, and Gamlin Drive located in Weinel Hills; and

WHEREAS, Rooters Asphalt has submitted the lowest and best bid in the interest of the City pursuant to such advertisement for bid.

NOW, THEREFORE, BE IT RESOLVED BY THE CITY COUNCIL OF THE CITY OF FAIRVIEW HEIGHTS:

That the Mayor be and is hereby authorized to enter into, on behalf of the City, a contract with Rooters Asphalt, 350 Carter Street, P.O. Box 175, Beckemeyer, Illinois 62219 for the asphalt resurfacing of Estates View Drive, Patricia Drive, Clark/Rebecca Drive, Weslake Drive; and Gamlin Drive located in Weinel Hills for the sum of ONE HUNDRED SEVENTY-SIX THOUSAND TWO HUNDRED THIRTY-ONE DOLLARS AND FOURTEEN CENTS ($176,231.14) for said project pursuant to bid documents attached hereto, and marked "Exhibit A."

This Resolution shall be in full force and effect from and after its passage and approval as provided by law.

PASSED:

APPROVED:

MARK T. KUPSKY - MAYOR
CITY OF FAIRVIEW HEIGHTS

ATTEST:

KAREN J. KAUFHOLD - CITY CLERK

"EXHIBIT A"

RETURN TO AGENDA

Illinois Department of Transportation

Local Public Agency Formal Contract

PROPOSAL SUBMITTED BY		
Rooters Asphalt		
Contractor's Name		
305 Carter Street		175
Street		P.O. Box
Beckemeyer	IL	62219
City	State	Zip Code

STATE OF ILLINOIS

COUNTY St. Clair

City of Fairview Heights, Illinois

(Name of City, Village, Town or Road District)

FOR THE IMPROVEMENT OF

STREET NAME OR ROUTE Weinel Hills

SECTION NO. N/A

TYPES OF FUNDS Home Rule

☒ SPECIFICATIONS (required) ☒ PLANS (required) ☒ CONTRACT BOND (when required)

For Municipal Projects

Submitted/Approved/Passed

☒ Mayor ☐ President of Board of Trustees ☐ Municipal Official

Date

Department of Transportation

☐ Concurrence in approval of award

Regional Engineer

Date

For County and Road District Projects

Submitted/Approved

Highway Commissioner

Date

Submitted/Approved

County Engineer/Superintendent of Highways

Date

RETURN TO AGENDA

County St. Clair
Local Public Agency Fairview Heights
Section Number N/A
Route Weinel Hills

1. THIS AGREEMENT, made and concluded the _____ day of _____ (Month and Year),

between the City of Fairview Heights

acting by and through its City Council known as the party of the first part, and

Rooters American Maintenance DBA Rooters Asphalt his/their executors, administrators, successors or assigns,

known as the party of the second part.

2. Witnesseth: That for and in consideration of the payments and agreements mentioned in the Proposal hereto attached, to be made and performed by the party of the first part, and according to the terms expressed in the Bond referring to these presents, the party of the second part agrees with said party of the first part at his/their own proper cost and expense to do all the work, furnish all materials and all labor necessary to complete the work in accordance with the plans and specifications hereinafter described, and in full compliance with all of the terms of this agreement and the requirements of the Engineer under it.

3. And it is also understood and agreed that the LPA Formal Contract Proposal, Special Provisions, Affidavit of Illinois Business Office, Apprenticeship or Training Program Certification, and Contract Bond hereto attached, and the Plans for Weinel Hills Asphalt Overlay, in City of Fairview Heights,

approved by the Illinois Department of Transportation and the City of Fairview Heights on N/A (Date), are essential documents of this

contract and are a part hereof.

4. IN WITNESS WHEREOF, The said parties have executed these presents on the date above mentioned.

Attest: Karen J. Kaufhold

_____ Clerk

(Seal)

The Mayor of Fairview Heights

By _____
Party of the First Part

(If a Corporation)

Corporate Name _____

By _____
President Party of the Second Part

(If a Co-Partnership)

Attest:

_____
Secretary

_____

Partners doing Business under the firm name of

_____
Party of the Second Part

(If an individual)

_____
Party of the Second Part

RETURN TO AGENDA

Illinois Department of Transportation

RETURN TO AGENDA

Contract Bond

Route Weinel Hills
County St. Clair
Local Agency Fairview Heights
Section N/A

We, _____

_____

a/an) ☐ Individual ☐ Co-partnership ☐ Corporation organized under the laws of the State of _____,

as PRINCIPAL, and _____

_____ as SURETY,

are held and firmly bound unto the above Local Agency (hereafter referred to as "LA") in the penal sum of

_____

_____ Dollars (_____), lawful money of the United States, well and truly to be paid unto said LA, for the payment of which we bind ourselves, our heirs, executors, administrators, successors, jointly to pay to the LA this sum under the conditions of this instrument.

WHEREAS THE CONDITION OF THE FOREGOING OBLIGATION IS SUCH that, the said Principal has entered into a written contract with the LA acting through its awarding authority for the construction of work on the above section, which contract is hereby referred to and made a part hereof, as if written herein at length, and whereby the said Principal has promised and agreed to perform said work in accordance with the terms of said contract, and has promised to pay all sums of money due for any labor, materials, apparatus, fixtures or machinery furnished to such Principal for the purpose of performing such work and has further agreed to pay all direct and indirect damages to any person, firm, company or corporation suffered or sustained on account of the performance of such work during the time thereof and until such work is completed and accepted; and has further agreed that this bond shall inure to the benefit of any person, firm, company or corporation to whom any money may be due from the Principal, subcontractor or otherwise for any such labor, materials, apparatus, fixtures or machinery so furnished and that suit may be maintained on such bond by any such person, firm, company or corporation for the recovery of any such money.

NOW THEREFORE, if the said Principal shall well and truly perform said work in accordance with the terms of said contract, and shall pay all sums of money due or to become due for any labor, materials, apparatus, fixtures or machinery furnished to him for the purpose of constructing such work, and shall commence and complete the work within the time prescribed in said contract, and shall pay and discharge all damages, direct and indirect, that may be suffered or sustained on account of such work during the time of the performance thereof and until the said work shall have been accepted, and shall hold the LA and its awarding authority harmless on account of any such damages and shall in all respects fully and faithfully comply with all the provisions, conditions and requirements of said contract, then this obligation to be void; otherwise to remain in full force and effect.

RETURN TO AGENDA

IN TESTIMONY WHEREOF, the said PRINCIPAL and the said SURETY have caused this instrument to be signed by their respective officers this _____ day of _____ A.D. _____

PRINCIPAL

_____ (Company Name)

By: _____ (Signature & Title)

Attest: _____ (Signature & Title)

_____ (Company Name)

By: _____ (Signature & Title)

Attest: _____ (Signature & Title)

(If PRINCIPAL is a joint venture of two or more contractors, the company names and authorized signature of each contractor must be affixed.)

STATE OF ILLINOIS,

COUNTY OF _____

I, _____, a Notary Public in and for said county, do hereby certify that

_____

_____

(Insert names of individuals signing on behalf or PRINCIPAL)

who are each personally known to me to be the same persons whose names are subscribed to the foregoing instrument on behalf of PRINCIPAL, appeared before me this day in person and acknowledged respectively, that they signed and delivered said instrument as their free and voluntary act for the uses and purposes therein set forth.

Given under my hand and notarial seal this _____ day of _____ A.D. _____

My commission expires _____ _____ Notary Public **(SEAL)**

SURETY

_____ (Name of Surety)

By: _____ (Signature of Attorney-in-Fact)

STATE OF ILLINOIS. **(SEAL)**

COUNTY OF _____

I, _____, a Notary Public in and for said county, do hereby certify that

_____

_____

(Insert names of individuals signing on behalf or SURETY)

who are each personally known to me to be the same persons whose names are subscribed to the foregoing instrument on behalf of SURETY, appeared before me this day in person and acknowledged respectively, that they signed and delivered said instrument as their free and voluntary act for the uses and purposes therein set forth.

Given under my hand and notarial seal this _____ day of _____ A.D. _____

My commission expires _____ _____ Notary Public **(SEAL)**

Approved this _____ day of _____, A.D. _____

Attest:

_____ _____ (Awarding Authority)

_____ Clerk _____ (Chairman/Mayor/President)

RETURN WITH BID

RETURN TO AGENDA

2

Illinois Department of Transportation

Local Public Agency Formal Contract Proposal

PROPOSAL SUBMITTED BY		
Contractor's Name	Rooters American Maintenance D.B.A. Rooters Asphalt	
Street	350 Carter Street/P.O. Box 175	P.O. Box
City	Beckemeyer, IL 62219 State	Zip Code

STATE OF ILLINOIS

COUNTY OF St. Clair

City of Fairview Heights
(Name of City, Village, Town or Road District)

FOR THE IMPROVEMENT OF

STREET NAME OR ROUTE NO. Weinel Hills

SECTION NO. N/A

TYPES OF FUNDS non-MFT

☒ SPECIFICATIONS (required) ☒ PLANS (required)

For Municipal Projects

Submitted/Approved/Passed

☐ Mayor ☐ President of Board of Trustees ☒ Municipal Official

3-7-2016

Date

Department of Transportation

☐ Released for bid based on limited review

Regional Engineer

Date

For County and Road District Projects

Submitted/Approved

Highway Commissioner

Date

Submitted/Approved

County Engineer/Superintendent of Highways

Date

Note: All proposal documents, including Proposal Guaranty Checks or Proposal Bid Bonds, should be stapled together to prevent loss when bids are processed.

RETURN TO AGENDA

County St. Clair
Local Public Agency Fairview Heights
Section Number N/A
Route Weinel Hills

PROPOSAL

1. Proposal of **Rooters American Maintenance D.B.A. Rooters Asphalt 350 Carter Street/P.O. Box 175 Beckemeyer, IL 62219**

for the improvement of the above section by the construction of Estates View Dr., Patricia Dr., Gamlin Dr., Weslake Dr., Clark Dr.

with Bituminous Surface removal, 2" and Replacement with HMA Surface Course N70, 2"

a total distance of 5410.00 feet, of which a distance of 5410.00 feet, (1.020 miles) are to be improved.

2. The plans for the proposed work are those prepared by the City of Fairview Heights and approved by the Department of Transportation on _____

3. The specifications referred to herein are those prepared by the Department of Transportation and designated as "Standard Specifications for Road and Bridge Construction" and the "Supplemental Specifications and Recurring Special Provisions" thereto, adopted and in effect on the date of invitation for bids.

4. The undersigned agrees to accept, as part of the contract, the applicable Special Provisions indicated on the "Check Sheet for Recurring Special Provisions" contained in this proposal.

5. The undersigned agrees to complete the work within N/A working days or by 04/30/2016 unless additional time is granted in accordance with the specifications.

6. A proposal guaranty in the proper amount, as specified ~~in BLRS~~ Special Provision for Bidding Requirements and Conditions for Contract Proposals, will be required. Bid Bonds will be allowed as a proposal guaranty. Accompanying this proposal is either a bid bond if allowed, on Department form BLR 12230 or a proposal guaranty check, complying with the specifications, made payable to:

Fairview Heights Treasurer of _____

The amount of the check is BID BOND ATTACHED ( ).

7. In the event that one proposal guaranty check is intended to cover two or more proposals, the amount must be equal to the sum of the proposal guaranties, which would be required for each individual proposal. If the proposal guaranty check is placed in another proposal, it will be found in the proposal for: Section Number _____.

8. The successful bidder at the time of execution of the contract will be required to deposit a contract bond for the full amount of the award. When a contract bond is not required, the proposal guaranty check will be held in lieu thereof. If this proposal is accepted and the undersigned fails to execute a contract and contract bond as required, it is hereby agreed that the Bid Bond or check shall be forfeited to the Awarding Authority.

9. Each pay item should have a unit price and a total price. If no total price is shown or if there is a discrepancy between the product of the unit price multiplied by the quantity, the unit price shall govern. If a unit price is omitted, the total price will be divided by the quantity in order to establish a unit price.

10. A bid will be declared unacceptable if neither a unit price nor a total price is shown.

11. The undersigned submits herewith the schedule of prices on BLR 12200a covering the work to be performed under this contract.

12. The undersigned further agrees that if awarded the contract for the sections contained in the combinations on BLR 12200a, the work shall be in accordance with the requirements of each individual proposal for the multiple bid specified in the Schedule for Multiple Bids below.

RETURN TO AGENDA

Illinois Department of Transportation

Schedule of Prices

Route	Weinel Hills
County	St. Clair
Local Agency	City of Fairview Heights
Section	N/A

RETURN WITH BID

(For complete information covering these items, see plans and specifications)

Item No.	Items	Unit	Quantity	Unit Price	Total
	Estates View Drive				
40600990	TEMPORARY RAMP	SY	80	9.35	748.00
40603315	HMA SC "C" N70 2	TON	541	73.55	39,790.55
40800010	BIT MATLS PR CT	GAL	483	4.65	2,245.95
40800030	AGG PR CT	TON	5	0.01	0.05
44000157	HMA SURF REM 2	SY	4,827	2.18	10,522.88
70101700	TRAFFIC CONT & PROT	LS	1	500.00	500.00
	Patricia Drive				
40600990	TEMPORARY RAMP	SY	40	9.35	374.00
40603315	HMA SC "C" N70 2	TON	152	73.55	11,179.60
40800010	BIT MATLS PR CT	GAL	136	4.65	736.00
40800030	AGG PR CT	TON	2	0.01	0.02
44000157	HMA SURF REM 2	SY	1,358	2.18	2,960.44
70101700	TRAFFIC CONT & PROT	LS	1	150.00	150.00
	Clark/Rebecca Drive				
40600990	TEMPORARY RAMP	SY	40	9.35	374.00
40603315	HMA SC "C" N70 2	TON	695	73.55	51,117.25
40800010	BIT MATLS PR CT	GAL	617	4.65	2,869.05
40800030	AGG PR CT	TON	7	0.01	0.07
44000157	HMA SURF REM 2	SY	6170	2.18	13,450.60
70101700	TRAFFIC CONT & PROT	LS	1	150.00	150.00
				TOTAL	$137,168.44

632.40

BLR 12222 (Rev. 04/01/09)

RETURN TO AGENDA

Illinois Department of Transportation

Schedule of Prices

Route	Weinel Hills
County	St. Clair
Local Agency	City of Fairview Heights
Section	N/A

RETURN WITH BID

(For complete information covering these items, see plans and specifications)

Item No.	Items	Unit	Quantity	Unit Price	Total
	Weslake Drive				
40603315	HMA SC "C" N70 2	TON	130	73.55	9,561.50
40800010	BIT MATLS PR CT	GAL	13	4.65	60.45
40800030	AGG PR CT	TON	1.2	0.01	0.01
44000157	HMA SURF REM 2	SY	1,156	2.18	2,520.08
70101700	TRAFFIC CONT & PROT	LS	1	150.00	150.00
	Gamlin Drive				
40603315	HMA SC "C" N70 2	TON	275	73.55	20,226.25
40800010	BIT MATLS PR CT	GAL	246	4.65	1,143.90
40800030	AGG PR CT	TON	2.5	0.01	0.03
44000157	HMA SURF REM 2	SY	2,456	2.18	5,354.08
70101700	TRAFFIC CONT & PROT	LS	1	150.00	150.00
				TOTAL	$ 39,166.30

PAGE #1 & #2 TOTALS $ 176,334.74 (176,331.14)

BLR 12222 (Rev. 04/01/09)

RETURN TO AGENDA

County St. Clair
Local Public Agency Fairview Heights
Section Number N/A
Route Weinel Hills

CONTRACTOR CERTIFICATIONS

The certifications hereinafter made by the bidder are each a material representation of fact upon which reliance is placed should the Department enter into the contract with the bidder.

1. **Debt Deliquency.** The bidder or contractor or subcontractor, respectively, certifies that it is not delinquent in the payment of any tax administered by the Department of Revenue unless the individual or other entity is contesting, in accordance with the procedures established by the appropriate revenue Act, its liability for the tax or the amount of tax. Making a false statement voids the contract and allows the Department to recover all amounts paid to the individual or entity under the contract in a civil action.

2. **Bid-Rigging or Bid Rotating.** The bidder or contractor or subcontractor, respectively, certifies that it is not barred from contracting with the Department by reason of a violation of either 720 ILCS 5/33E-3 or 720 ILCS 5/33E-4.

   A violation of Section 33E-3 would be represented by a conviction of the crime of bid-rigging which, in addition to Class 3 felony sentencing, provides that any person convicted of this offense or any similar offense of any state or the United States which contains the same elements as this offense shall be barred for 5 years from the date of conviction from contracting with any unit of State or local government. No corporation shall be barred from contracting with any unit of State or local government as a result of a conviction under this Section of any employee or agent of such corporation if the employee so convicted is no longer employed by the corporation and: (1) it has been finally adjudicated not guilty or (2) if it demonstrates to the governmental entity with which it seeks to contract and that entity finds that the commission of the offense was neither authorized, requested, commanded, nor performed by a director, officer or a high managerial agent in behalf of the corporation.

   A violation of Section 33E-4 would be represented by a conviction of the crime of bid-rotating which, in addition to Class 2 felony sentencing, provides that any person convicted of this offense or any similar offense of any state or the United States which contains the same elements as this offense shall be permanently barred from contracting with any unit of State or local government. No corporation shall be barred from contracting with any unit of State or local government as a result of a conviction under this Section of any employee or agent of such corporation if the employee so convicted is no longer employed by the corporation and: (1) it has been finally adjudicated not guilty or (2) if it demonstrates to the governmental entity with which it seeks to contract and that entity finds that the commission of the offense was neither authorized, requested, commanded, nor performed by a director, officer or a high managerial agent in behalf of the corporation.

3. **Bribery.** The bidder or contractor or subcontractor, respectively, certifies that it has not been convicted of bribery or attempting to bribe an officer or employee of the State of Illinois or any unit of local government, nor has the firm made an admission of guilt of such conduct which is a matter of record, nor has an official, agent, or employee of the firm committed bribery or attempted bribery on behalf of the firm and pursuant to the direction or authorization of a responsible official of the firm.

4. **Interim Suspension or Suspension.** The bidder or contractor or subcontractor, respectively, certifies that it is not currently under a suspension as defined in Subpart I of Title 44 Subtitle A Chapter III Part 6 of the Illinois Administrative Code. Furthermore, if suspended prior to completion of this work, the contract or contracts executed for the completion of this work may be cancelled.

RETURN WITH BID

RETURN TO AGENDA

County St. Clair
Local Public Agency Fairview Heights
Section Number N/A
Route Weinel Hills

SIGNATURES

(If an individual)

Signature of Bidder N/A

Business Address

(If a partnership)

Firm Name

Signed By

Business Address

N/A

Inset Names and Addressed of All Partners

(If a corporation)

Corporate Name ROOTERS AMERICAN MAINTENANCE, INC. /DBA/ ROOTERS ASPHALT

Signed By
President

Business Address **Rooters American Maintenance**
D.B.A. Rooters Asphalt
350 Carter Street/P.O. Box 175
Beckemeyer, IL 62219

Insert Names of Officers

President JOHN GARCIA

Secretary JIM GARCIA

Treasurer JOHN GARCIA

Attest:
Secretary

Illinois Department of Transportation

RETURN TO AGENDA

Local Agency Proposal Bid Bond

Route: Weinel Hills
County: St. Clair
Local Agency: Fairview Heights
Section: N/A

RETURN WITH BID

PAPER BID BOND

WE Rooters American Maintenance, Inc. d/b/a Rooters Asphalt, 350 Carter Street/PO Box 175, Beckemeyer, IL 62219 as PRINCIPAL,

and Travelers Casualty and Surety Company of America, One Tower Square, Hartford, CT 06183 as SURETY,

are held jointly, severally and firmly bound unto the above Local Agency (hereafter referred to as "LA") in the penal sum of 5% of the total bid price, or for the amount specified in the proposal documents in effect on the date of invitation for bids whichever is the lesser sum. We bind ourselves, our heirs, executors, administrators, successors, and assigns, jointly pay to the LA this sum under the conditions of this instrument.

WHEREAS THE CONDITION OF THE FOREGOING OBLIGATION IS SUCH that, the said PRINCIPAL is submitting a written proposal to the LA acting through its awarding authority for the construction of the work designated as the above section.

THEREFORE if the proposal is accepted and a contract awarded to the PRINCIPAL by the LA for the above designated section and the PRINCIPAL shall within fifteen (15) days after award enter into a formal contract, furnish surety guaranteeing the faithful performance of the work, and furnish evidence of the required insurance coverage, all as provided in the "Standard Specifications for Road and Bridge Construction" and applicable Supplemental Specifications, then this obligation shall become void; otherwise it shall remain in full force and effect.

IN THE EVENT the LA determines the PRINCIPAL has failed to enter into a formal contract in compliance with any requirements set forth in the preceding paragraph, then the LA acting through its awarding authority shall immediately be entitled to recover the full penal sum set out above, together with all court costs, all attorney fees, and any other expense of recovery.

IN TESTIMONY WHEREOF, the said PRINCIPAL and the said SURETY have caused this instrument to be signed by their respective officers this 22 day of March, 2016

Principal

Rooters American Maintenance, Inc.
d/b/a Rooters Asphalt
(Company Name)

By: [signature] President
(Signature and Title)

(Company Name)

By:
(Signature and Title)

(If PRINCIPLE is a joint venture of two or more contractors, the company names, and authorized signatures of each contractor must be affixed.)

Surety

Travelers Casualty and Surety Company of America
(Name of Surety)

By: [signature]
Barbara Buchhold, Attorney-In-Fact
(Signature of Attorney-in-Fact)

STATE OF ~~ILLINOIS~~ MISSOURI,
COUNTY OF ST. LOUIS

I, Jessica Avery, a Notary Public in and for said county,
do hereby certify that and Barbara Buchhold
(Insert names of individuals signing on behalf of PRINCIPAL & SURETY)

who are each personally known to me to be the same persons whose names are subscribed to the foregoing instrument on behalf of PRINCIPAL and SURETY, appeared before me this day in person and acknowledged respectively, that they signed and delivered said instruments as their free and voluntary act for the uses and purposes therein set forth.

Given under my hand and notarial seal this 22 day of March, 2016

My commission expires February 24, 2019

[signature]
Jessica Avery, (Notary Public)

JESSICA AVERY
Notary Public - Notary Seal
~~STATE OF~~ MISSOURI
St. Louis County
My Commission Expires: Feb. 24, 2019
Commission # 15633529

ELECTRONIC BID BOND

☐ **Electronic bid bond is allowed (box must be checked by LA if electronic bid bond is allowed)**

The Principal may submit an electronic bid bond, in lieu of completing the above section of the Proposal Bid Bond Form. By providing an electronic bid bond ID code and signing below, the Principal is ensuring the identified electronic bid bond has been executed and the Principal and Surety are firmly bound unto the LA under the conditions of the bid bond as shown above. (If PRINCIPAL is a joint venture of two or more contractors, an electronic bid bond ID code, company/Bidder name title and date must be affixed for each contractor in the venture.)

Electronic Bid Bond ID Code

(Company/Bidder Name)

(Signature and Title)

Date

BLR 12230 (Rev. 7/05

RETURN TO AGENDA

State of **Missouri**
County of **St. Louis**

On **3/22/2016**, before me, a Notary Public in and for said County and State, residing therein, duly commissioned and sworn, personally appeared **Barbara Buchhold** known to me to be Attorney-in-Fact of

TRAVELERS CASUALTY AND SURETY COMPANY OF AMERICA

the corporation described in and that executed the within and foregoing instrument, and known to me to be the person who executed the said instrument in behalf of said corporation, and he duly acknowledged to me that such corporation executed the same.

IN WITNESS WHEREOF, I have hereunto set my hand and affixed my official seal, the day and year stated in this certificate above.

Jessica Avery, Notary Public

JESSICA AVERY
Notary Public - Notary Seal
STATE OF MISSOURI
St. Louis County
My Commission Expires: Feb. 24, 2019
Commission # 15633529

My Commission Expires: _____

WARNING: THIS POWER OF ATTORNEY IS INVALID WITHOUT THE RED BORDER

TRAVELERS

POWER OF ATTORNEY

Farmington Casualty Company
Fidelity and Guaranty Insurance Company
Fidelity and Guaranty Insurance Underwriters, Inc.
St. Paul Fire and Marine Insurance Company
St. Paul Guardian Insurance Company

St. Paul Mercury Insurance Company
Travelers Casualty and Surety Company
Travelers Casualty and Surety Company of America
United States Fidelity and Guaranty Company

RETURN TO AGENDA

Attorney-In Fact No. 230491

Certificate No. 006648190

KNOW ALL MEN BY THESE PRESENTS: That Farmington Casualty Company, St. Paul Fire and Marine Insurance Company, St. Paul Guardian Insurance Company, St. Paul Mercury Insurance Company, Travelers Casualty and Surety Company, Travelers Casualty and Surety Company of America, and United States Fidelity and Guaranty Company are corporations duly organized under the laws of the State of Connecticut, that Fidelity and Guaranty Insurance Company is a corporation duly organized under the laws of the State of Iowa, and that Fidelity and Guaranty Insurance Underwriters, Inc., is a corporation duly organized under the laws of the State of Wisconsin (herein collectively called the "Companies"), and that the Companies do hereby make, constitute and appoint

Andrew P. Thome, Dana A. Dragoy, Peter J. Mohs, Debra A. Woodard, Barbara Buchhold, Michael D. Wiedemeier, Amanda L. Williams, and Jessica Avery

of the City of Chesterfield, State of Missouri, their true and lawful Attorney(s)-in-Fact, each in their separate capacity if more than one is named above, to sign, execute, seal and acknowledge any and all bonds, recognizances, conditional undertakings and other writings obligatory in the nature thereof on behalf of the Companies in their business of guaranteeing the fidelity of persons, guaranteeing the performance of contracts and executing or guaranteeing bonds and undertakings required or permitted in any actions or proceedings allowed by law.

IN WITNESS WHEREOF, the Companies have caused this instrument to be signed and their corporate seals to be hereto affixed, this 25th day of February, 2016.

Farmington Casualty Company
Fidelity and Guaranty Insurance Company
Fidelity and Guaranty Insurance Underwriters, Inc.
St. Paul Fire and Marine Insurance Company
St. Paul Guardian Insurance Company

St. Paul Mercury Insurance Company
Travelers Casualty and Surety Company
Travelers Casualty and Surety Company of America
United States Fidelity and Guaranty Company

State of Connecticut
City of Hartford ss.

By: _____
Robert L. Raney, Senior Vice President

On this the 25th day of February, 2016, before me personally appeared Robert L. Raney, who acknowledged himself to be the Senior Vice President of Farmington Casualty Company, Fidelity and Guaranty Insurance Company, Fidelity and Guaranty Insurance Underwriters, Inc., St. Paul Fire and Marine Insurance Company, St. Paul Guardian Insurance Company, St. Paul Mercury Insurance Company, Travelers Casualty and Surety Company, Travelers Casualty and Surety Company of America, and United States Fidelity and Guaranty Company, and that he, as such, being authorized so to do, executed the foregoing instrument for the purposes therein contained by signing on behalf of the corporations by himself as a duly authorized officer.

In Witness Whereof, I hereunto set my hand and official seal.
My Commission expires the 30th day of June, 2016.

Marie C. Tetreault, Notary Public

58440-8-12 Printed in U.S.A.

WARNING: THIS POWER OF ATTORNEY IS INVALID WITHOUT THE RED BORDER

RETURN TO AGENDA

This Power of Attorney is granted under and by the authority of the following resolutions adopted by the Boards of Directors of Farmington Casualty Company, Fidelity and Guaranty Insurance Company, Fidelity and Guaranty Insurance Underwriters, Inc., St. Paul Fire and Marine Insurance Company, St. Paul Guardian Insurance Company, St. Paul Mercury Insurance Company, Travelers Casualty and Surety Company, Travelers Casualty and Surety Company of America, and United States Fidelity and Guaranty Company, which resolutions are now in full force and effect, reading as follows:

RESOLVED, that the Chairman, the President, any Vice Chairman, any Executive Vice President, any Senior Vice President, any Vice President, any Second Vice President, the Treasurer, any Assistant Treasurer, the Corporate Secretary or any Assistant Secretary may appoint Attorneys-in-Fact and Agents to act for and on behalf of the Company and may give such appointee such authority as his or her certificate of authority may prescribe to sign with the Company's name and seal with the Company's seal bonds, recognizances, contracts of indemnity, and other writings obligatory in the nature of a bond, recognizance, or conditional undertaking, and any of said officers or the Board of Directors at any time may remove any such appointee and revoke the power given him or her; and it is

FURTHER RESOLVED, that the Chairman, the President, any Vice Chairman, any Executive Vice President, any Senior Vice President or any Vice President may delegate all or any part of the foregoing authority to one or more officers or employees of this Company, provided that each such delegation is in writing and a copy thereof is filed in the office of the Secretary; and it is

FURTHER RESOLVED, that any bond, recognizance, contract of indemnity, or writing obligatory in the nature of a bond, recognizance, or conditional undertaking shall be valid and binding upon the Company when (a) signed by the President, any Vice Chairman, any Executive Vice President, any Senior Vice President or any Vice President, any Second Vice President, the Treasurer, any Assistant Treasurer, the Corporate Secretary or any Assistant Secretary and duly attested and sealed with the Company's seal by a Secretary or Assistant Secretary; or (b) duly executed (under seal, if required) by one or more Attorneys-in-Fact and Agents pursuant to the power prescribed in his or her certificate or their certificates of authority or by one or more Company officers pursuant to a written delegation of authority; and it is

FURTHER RESOLVED, that the signature of each of the following officers: President, any Executive Vice President, any Senior Vice President, any Vice President, any Assistant Vice President, any Secretary, any Assistant Secretary, and the seal of the Company may be affixed by facsimile to any Power of Attorney or to any certificate relating thereto appointing Resident Vice Presidents, Resident Assistant Secretaries or Attorneys-in-Fact for purposes only of executing and attesting bonds and undertakings and other writings obligatory in the nature thereof, and any such Power of Attorney or certificate bearing such facsimile signature or facsimile seal shall be valid and binding upon the Company and any such power so executed and certified by such facsimile signature and facsimile seal shall be valid and binding on the Company in the future with respect to any bond or understanding to which it is attached.

I, Kevin E. Hughes, the undersigned, Assistant Secretary, of Farmington Casualty Company, Fidelity and Guaranty Insurance Company, Fidelity and Guaranty Insurance Underwriters, Inc., St. Paul Fire and Marine Insurance Company, St. Paul Guardian Insurance Company, St. Paul Mercury Insurance Company, Travelers Casualty and Surety Company, Travelers Casualty and Surety Company of America, and United States Fidelity and Guaranty Company do hereby certify that the above and foregoing is a true and correct copy of the Power of Attorney executed by said Companies, which is in full force and effect and has not been revoked.

WITHOUT THE RED BORDER THE POWER OF ATTORNEY IS INVALID

IN TESTIMONY WHEREOF, I have hereunto set my hand and affixed the seals of said Companies this 22 day of March, 20 16.

Kevin E. Hughes, Assistant Secretary

To verify the authenticity of this Power of Attorney, call 1-800-421-3880 or contact us at www.travelersbond.com. Please refer to the Attorney-In-Fact number, the above-named individuals and the details of the bond to which the power is attached.

RETURN TO AGENDA

Illinois Department of Transportation

Apprenticeship or Training Program Certification

Return with Bid

Route	Weinel Hills
County	St. Clair
Local Agency	Fairview Heights
Section	N/A

All contractors are required to complete the following certification:

☒ For this contract proposal or for all groups in this deliver and install proposal.

☐ For the following deliver and install groups in this material proposal:

Rooters American Maintenance
D.B.A. Rooters Asphalt
350 Carter Street/P.O. Box 175
Beckemeyer, IL 62219

Illinois Department of Transportation policy, adopted in accordance with the provisions of the Illinois Highway Code, requires this contract to be awarded to the lowest responsive and responsible bidder. The award decision is subject to approval by the Department. In addition to all other responsibility factors, this contract or deliver and install proposal requires all bidders and all bidders' subcontractors to disclose participation in apprenticeship or training programs that are (1) approved by and registered with the United States Department of Labor's Bureau of Apprenticeship and Training, and (2) applicable to the work of the above indicated proposals or groups. Therefore, all bidders are required to complete the following certification:

I. Except as provided in paragraph IV below, the undersigned bidder certifies that it is a participant, either as an individual or as part of a group program, in an approved apprenticeship or training program applicable to each type of work or craft that the bidder will perform with its own employees.

II. The undersigned bidder further certifies for work to be performed by subcontract that each of its subcontractors submitted for approval either (A) is, at the time of such bid, participating in an approved, applicable apprenticeship or training program; or (B) will, prior to commencement of performance of work pursuant to this contract, establish participation in an approved apprenticeship or training program applicable to the work of the subcontract.

III. The undersigned bidder, by inclusion in the list in the space below, certifies the official name of each program sponsor holding the Certificate of Registration for all of the types of work or crafts in which the bidder is a participant and that will be performed with the bidder's employees. Types of work or craft that will be subcontracted shall be included and listed as subcontract work. The list shall also indicate any type of work or craft job category for which there is no applicable apprenticeship or training program available.

OPERATING ENGINEERS LOCAL 520
LOCAL LABORER HALL

RETURN TO AGENDA

IV. Except for any work identified above, any bidder or subcontractor that shall perform all or part of the work of the contract or deliver and install proposal solely by individual owners, partners or members and not by employees to whom the payment of prevailing rates of wages would be required, check the following box, and identify the owner/operator workforce and positions of ownership. ☐

_____

_____

_____

_____

_____

The requirements of this certification and disclosure are a material part of the contract, and the contractor shall require this certification provision to be included in all approved subcontracts. The bidder is responsible for making a complete report and shall make certain that each type of work or craft job category that will be utilized on the project is accounted for and listed. The Department at any time before or after award may require the production of a copy of each applicable Certificate of Registration issued by the United States Department of Labor evidencing such participation by the contractor and any or all of its subcontractors. In order to fulfill the participation requirement, it shall not be necessary that any applicable program sponsor be currently taking or that it will take applications for apprenticeship, training or employment during the performance of the work of this contract or deliver and install proposal.

Bidder: **Rooters American Maintenance D.B.A. Rooters Asphalt**

Address: **350 Carter Street/P.O. Box 175 Beckemeyer, IL 62219**

By: _____ (Signature)

Title: President

RETURN WITH BID

RETURN TO AGENDA

Illinois Department of Transportation

Affidavit of Illinois Business Office

County: St. Clair
Local Public Agency: Fairview Heights
Section Number: N/A
Route: Weinel Hills

State of ILLINOIS)
) ss.
County of CLINTON)

I, JOHN GARCIA (Name of Affiant) of BECKEMEYER (City of Affiant), ILLINOIS (State of Affiant),

being first duly sworn upon oath, states as follows:

1. That I am the PRESIDENT (officer or position) of Rooters American Maintenance D.B.A. Rooters Asphalt 350 Carter Street/P.O. Box 175 Beckemeyer, IL 62219 (bidder).
2. That I have personal knowledge of the facts herein stated.
3. That, if selected under this proposal, Rooters American Maintenance D.B.A. Rooters Asphalt 350 Carter Street/P.O. Box 175 Beckemeyer, IL 62219 (bidder), will maintain a business office in the State of Illinois which will be located in _____ County, Illinois.
4. That this business office will serve as the primary place of employment for any persons employed in the construction contemplated by this proposal.
5. That this Affidavit is given as a requirement of state law as provided in Section 30-22(8) of the Illinois Procurement Code.

(Signature)

JOHN GARCIA
(Print Name of Affiant)

This instrument was acknowledged before me on 22ND day of MARCH, 2016.

(SEAL) OFFICIAL SEAL
PAUL TEGENKAMP
NOTARY PUBLIC, STATE OF ILLINOIS
MY COMMISSION EXPIRES 08-24-19

(Signature of Notary Public)

RETURN TO AGENDA

INDEX TO SPECIAL PROVISIONS

SHEET	SPECIAL PROVISION
2	DESCRIPTION OF WORK
2	COMPLETION DATE
2	PROPOSAL GUARANTEE
2	PREVAILING WAGES
3	J.U.L.I.E.
3	TRAFFIC CONTROL AND PROTECTION
3	INSURANCE
4	BITUMINOUS SURFACE REMOVAL, 2
5	CONTRACTOR RESPONSIBILITY
5	TEMPORARY RAMP
5	INDEMNITY CLAUSE
6	PROJECT LABOR AGREEMENT

RETURN TO AGENDA

SPECIAL PROVISIONS

The following special provisions supplement the Illinois Department of Transportation "Standard Specifications for Road and Bridge Construction", adopted January 1, 2012, the latest edition of the "Manual on Uniform Traffic Control Devices for Streets and Highways", and the Supplemental Specifications and Recurring Special Provisions indicated on the included Check Sheets.

DESCRIPTION OF WORK

The work associated with this contract consists of bituminous surface removal and replacement on **Estates View Drive** between St. Clair Avenue and Patricia Drive; **Patricia Drive** between Estates View Drive and Gamlin Drive; **Clark Drive** From Wilshire Drive through to the cul-de-sac and the dead end to the north, **Gamlin Drive** from Patricia to 800" (+/-) to the north east and **Weslake Drive** from Estates View west 400' (+/-) in the City of Fairview Heights, Illinois 62208. The existing bituminous surface is to be removed to a depth of two inches and replaced with a two inch HMA surface course. The Estates View Drive section of this project is approximately 1694' X 26,' the Patricia Drive section is approximately 473' X 26' and the Clark Drive section is approximately 1992' X 26'. The Gamlin Drive portion is approximately 850' X 26' and Weslake Drive 400' X 26'. See the attached exhibit for locations.

Other items of work consist of TRAFFIC CONTROL AND PROTECTION, TEMPORARY RAMP, SHORT TERM PAVEMENT MARKING, and THERMOPLASTIC PAVEMENT MARKING.

COMPLETION DATE

All work associated with this contract shall be completed no later than **APRIL 30, 2016**. Should the work not be completed by the assigned date liquidated damages will be assessed according to the Standard Specifications for Road and Bridge Construction, Article 108.09

PROPOSAL GUARANTEE

The proposal guarantee shall consist of one of the following acceptable measures: certified check, bank cashier's check, bank draft, (all payable to the "Treasurer of The City of Fairview Heights"), or bid bond utilizing the form BLR 12230 located at the end of the proposal.

RETURN TO AGENDA

PREVAILING WAGES

All laborers, operators, mechanics and other such members of the project workforce shall be paid at a rate not less than the prevailing wages set forth by St. Clair County and The Department of labor.

J.U.L.I.E.

This work shall be performed in accordance with Article 107.31 of the Standard Specifications for Road and Bridge Construction.

TRAFFIC CONTROL AND PROTECTION

The contractor is to make provisions to ensure access to the neighborhood is allowed at all times during construction. The contractor is to make provisions to ensure access to the residents of Estates View, Patricia Drive, Gamlin, Weslake and Clark Drive have access to their property at all times during construction.

INSURANCE

Add the following paragraph after paragraph (d) of Article 107.27 of The Standard Specifications for Road and Bridge Construction.

"The General Liability, Automobile Liability and Umbrella Liability coverage shall provide, by endorsement in the appropriate manner and form, City of Fairview Heights, its Officers and Employees as Additional Insured with respect to policies, for occurrences arising in the whole or in the part out of the work and operations performed under this contract. The City of Fairview Heights shall be listed as Certificate Holder under the Worker's Compensation coverage. The specifics of the City of Fairview Heights Insurance requirements are as follows:

(1) **Workers Compensation and Employers Liability.**

(a) Workers compensation shall be provided according to the provisions of the Illinois Workers' Compensation Act, as amended. Notwithstanding the rating and financial size categories stated herein, coverage may be provided by a group self-insurer authorized in Section 4(a) of the Act and approved pursuant to the rules of the Illinois Department of Insurance.

(b) Employers Liability

i. Each accident $500,000
ii. Disease-policy limit $500,000
iii. Disease – each employee $500,000

(2) **Commercial General Liability.** Required liability insurance coverage shall be written in the occurrence form and shall provide coverage for operations of the Contractor/Vendor, operations of subcontractors (contingent or protective liability); completed operations; broad form property damage and hazards of explosion, collapse

and underground; and contractual liability. The general aggregate limit shall be endorsed on a per project basis.

(a) General Aggregate Limit $2,000,000
(b) Products-Completed Operations Aggregate Limit $2,000,000
(c) Each Occurrence Limit $1,000,000

The coverage shall provide by an endorsement in the appropriate manner and form that the City, its officers, and employees shall be named as additional insureds with respect to the policies and any umbrella excess liability coverage for occurrences arising in whole or in part out of the work and operations performed. The City may accept a separate owner's protective liability policy in lieu of the City, its officers, and employees being insureds on the Contractor's/Vendor's policies.

(3) **Commercial Automobile Liability.** The policy shall cover owned, non-owned, and hired vehicles. Bodily Injury & Property Damage Liability Limit Each Occurrence $1,000,000

(4) **Umbrella Liability.** Any policy shall provide excess limits over and above the other insurance limits stated herein. The Contractor/Vendor may purchase insurance for the full limits required or by a combination of primary policies for lesser limits and remaining limits provided by the umbrella policy.

All insurance shall remain in force during the period covering occurrences happening on or after the effective date and remain in effect during performance of the work and at all times thereafter when the Contractor/Vendor may be correcting, removing, or replacing defective work until notification of the date of final inspection. Termination or refusal to renew shall not be made without **thirty (30) days** prior written notice to the City by the insurer and the policies shall be endorsed so as to remove any language restricting or limiting liability concerning this obligation.

Certified copies of the original policies or certificate(s) of insurance by the insurer(s) issuing the policies and endorsements setting forth the coverage, limits and endorsements shall be filed with the City Clerk before the City will execute the contract. A certificate of insurance shall include a statement "the coverage and limits conform to the minimums required by this Section. Any exception or deviation shall be brought to the attention of the City for a ruling of acceptability. In no event shall any failure of the City to receive policies or certificates or to demand receipt be construed as a waiver of the Contractor's/Vendor's obligation to obtain and keep in force the required insurance."

All costs for insurance as specified herein will be considered as included in the cost of the contract. The Contractor/Vendor shall, at its expense and risk of delay, cease operations if the insurance required is terminated or reduced below the required amounts of coverage. Coverage in the minimum amounts set forth herein shall not be construed to relieve the Contractor/Vendor from its obligation to indemnify in excess of the coverage according to the contract.

RETURN TO AGENDA

BITUMINOUS SURFACE REMOVAL, 2

The contractor shall make provisions to completely remove from the project site the millings generated by this item of work. The City of Fairview Heights Street Department Facility will not be accepting milling material.

CONTRACTOR RESPONSIBILITY

It is the responsibility of the bidding contractor to inspect the project site and make provisions in his/her bid to account for any field conditions that may be encountered during the performance of the work associated with this contract.

TEMPORARY RAMPS

For this contract TEMPORARY RAMP has been included for all intersections with Estates View Drive, Patricia Drive at Gamlin Drive and for Clark Drive at Wilshire Drive.

INDEMNITY CLAUSE

A) Contractor shall indemnify and hold safe and harmless the City of Fairview Heights from all suites, actions, claims, demands, interest or payments brought on account of any injuries or damages (including damages for care and loss of services because of bodily injury, sickness or disease including death resulting there from) sustained by any person or property (including employees of the contractor or his subcontractors) in consequence of any neglect, fault, act or failure to act on the part of the contractor, his subcontractors, their servants, agents or employees, in the safe-guarding or performance of the work undertaken by the contractor in this agreement.

B) Contractor further agrees to indemnify the City of Fairview Heights against any costs and attorneys fees incurred as a result of any injuries or damages covered under the foregoing Paragraph A.

C) Contractor accordingly agrees to assume all risk and liabilities for accidents or damages that may occur to persons or property during the performance of the work under this agreement and these specifications, by reason of the negligence or carelessness of himself, his agents, his employees or his subcontractor's employees and agents.

D) Should any other contractor or subcontractor having or who shall hereafter have a contract with the City for the performance of work upon the site sustain

any damage through any act or omission of the contractor hereunder or through any act or omission of any subcontractor of contractor, contractor agrees to reimburse such other contractor for all such damages and to indemnify and hold the City harmless from all such claims.

E) This agreement shall be binding on and insure to the benefit of the heirs, executors, administrators, successors and assigns of the respective parties thereof.

PROJECT LABOR AGREEMENT

The following pages contain a Project Labor Agreement adopted by the City of Fairview Heights along with the corresponding legislation. Please pay particular attention to the letter appearing behind the Agreement Resolution.

Please sign the Agreement and **RETURN WITH BID.**

RETURN TO AGENDA

RESOLUTION NO. 3887-2015

A RESOLUTION AUTHORIZING THE MAYOR TO ENTER INTO A PROJECT LABOR AGREEMENT WITH THE SOUTHWESTERN ILLINOIS BUILDING & CONSTRUCTION TRADES COUNCIL.

WHEREAS, the City of Fairview Heights, Illinois ("the City"), annually expends substantial sums in the purchase of construction goods and services on property owned by the City, and

WHEREAS, said expenditures constitute a major investment in regard to the City's property, and the City finds itself competing in the private marketplace for these construction goods and services, and,

WHEREAS, time lost due to labor strife and jurisdictional disputes can cause serious delays in the completion of construction projects and consequently can cause an increase in the cost of said construction projects, and,

WHEREAS, there are trade unions that are recognized by the National Labor Relations Board, and which have as their primary duties the negotiation of wages and hours, no-strike agreements, and other matters on behalf of their members, and, furthermore, have control of the apprenticeship of new members and the continued training of current members, and

WHEREAS, Project Labor Agreements have generally proven to be of particular economic benefit to property owners, including states and their political subdivisions, for their major construction, alteration, painting, or repair projects (including any closely interrelated series of projects), particularly those which extend for a substantial period of time and involve a substantial number of construction contractors and subcontractors or a substantial number of construction trades and specialized craft workers, and

RETURN TO AGENDA

WHEREAS, Project Labor Agreements facilitate the timely and efficient completion of such projects by:

a. Making available a ready and adequate supply of high trained and skilled craft workers, and,

b. Permitting public and private owners and contractors to more accurately predict project labor costs at the bidding stage, and,

c. Establishing working conditions for all construction crafts for the duration of the project, and

d. Providing a legally enforceable means of assuring labor stability and labor peace over the life of such project thereby reducing the possibility of interruptions and delays resulting from labor disputes, and,

WHEREAS, the generally short term nature of employment in the construction industry makes post-hire collective bargaining difficult and unrealistic, and

WHEREAS, the National Labor Relations Act, 29 U.S.C. Section 151, et. seq., allows for a collective bargaining agreement between a labor organization and an employer in the construction industry relating to the contracting or subcontracting of work to be done at the site of the construction, alteration, painting, or repair of a building, structure, or other work, and

WHEREAS, the courts have upheld the right of states and their subdivisions, as proprietors, to enter into construction contracts with project managers or general contractors which contain said Project Labor Agreement provisions and have found such Project Labor Agreement provisions not to be in violation of preemption under the National Labor Relations Act or Employer Retirement Income Security Act, the Equal

RETURN TO AGENDA

Protection and Due Process Clauses of the 14th Amendment, and the Sherman Anti-Trust Act. 15 U.S.C., Section 1, et. seq.

NOW, THEREFORE, IN VIEW OF THE FOREGOING ECONOMIC BENEFITS TO BE DERIVED BY THE CITY THROUGH SUCH LABOR AGREEMENT, BE IT RESOLVED BY THE CITY COUNCIL OF THE CITY OF FAIRVIEW HEIGHTS:

That the Mayor be and is hereby authorized to enter into a Project Labor Agreement and that the City of Fairview Heights, Illinois and its committees, departments and agents shall henceforth, with respect to the construction, alteration, painting, or repair of its property, as a part of the specifications in regard to such construction, alteration, painting, or repair of its property, require that any successful bidder enter into the attached "City of Fairview Heights, Illinois Project Labor Agreement" (or as hereafter amended), (attached hereto and marked as Exhibit A) covering such construction, alteration, painting, or repair projects.

This Resolution shall be in full force and effect from and after its passage and approval as provided by law.

PASSED: January 20, 2015

APPROVED: January 21, 2015

MARK T. KUPSKY, CITY CLERK - CITY OF FAIRVIEW HEIGHTS SEAL

ATTEST:

MARK T. KUPSKY, CITY CLERK

SPONSORED BY: Public Works & Municipal Complex Committee

GAIL D. MITCHELL, MAYOR
CITY OF FAIRVIEW HEIGHTS

ROLL CALL ON ALDERMEN VOTING "YEA"

CAROL WARNER
JUSTIN GOUGH
JOSHUA FRAWLEY
PAT BAESKE
LINDA ARNOLD
ROGER LOWRY
DENISE WILLIAMS
DENNIS BARICEVIC
SCOTT GREENWALD

ROLL CALL ON ALDERMEN VOTING "NAY"

BONNIE CROSSLEY

RETURN TO AGENDA

CCV
JSH
J Snider
DRW.
File
1/29/15

Chartered 1907

Southwestern Illinois
Building & Construction Trades Council
AFL-CIO

2A Meadow Heights Professional Park, Collinsville, IL 62234
Phone 618-344-6050 Fax 618-344-6285

January 26, 2015

JAN 2 9 2014

Christopher Volkman
Director of Public Works
City of Fairview Heights
10025 Bunkum Road
Fairview Heights IL 62208

Dear Mr. Volkman,

The Southwestern Illinois Building and Construction Trades Council is in receipt of Resolution No. 3887-2015 with Exhibit A wherein the City of Fairview Heights adopted the Project Labor Agreement (PLA).

Please be advised the Project Labor Agreement (Exhibit A) does not require a signature from the Building Trades until after a project is awarded.

When a project is let for bid, the contractor is required to sign the PLA and submit it, along with his bid documents, to the City. Only after an award is made on a project is the PLA submitted to the Building Trades (by either the contractor or the City – your choice) for the Executive Secretary's signature. The countersigned agreement is then returned to the contractor. The contractor will be contacted directly by this office to schedule the required pre-job conference.

Should you have any questions, please do not hesitate to contact me.

Sincerely,

Dale Stewart
Executive Secretary-Treasurer

/rh

RETURN WITH BID

RETURN TO AGENDA

Rooters American Maintenance
D.B.A. Rooters Asphalt
350 Carter Street/P.O. Box 175
Beckemeyer, IL 62219

"EXHIBIT A"

CITY OF FAIRVIEW HEIGHTS, ILLINOIS
PROJECT LABOR AGREEMENT

As adopted on November 10, 2004 by the
Southwestern Illinois Building & Construction Trades Council Board of Business Agents

This Agreement is entered into this 22ND day of MARCH, 2016 by and between _____ and the Southwestern Illinois Building Trades Council (SIBTC) for and on behalf of its affiliates which sign a "Union Letter of Assent" (Signatory Union Affiliates) for this Project Labor Agreement, hereinafter referred to as the "Union." This Agreement shall apply to work performed by the Employer and its Contractors and Subcontractors on Construction known as the WERNER HILLS - FAIRVIEW HEIGHTS, ILLINOIS.

ARTICLE I - INTENT AND PURPOSES

1.1 This Project Agreement shall apply and is limited to the recognized and accepted historical definition of new construction work under the direction of and performed by the Contractor(s), of whatever tier, which may include the Project Contractor, who have contracts awarded for such work on the Project. Such work shall include site preparation work and dedicated off-site work.

The Project is defined as:
WERNER HILLS - FAIRVIEW HEIGHTS, ILLINOIS

1.2 It is agreed that the Project Contractor shall require all Contractors of whatever tier who have been awarded contracts for work covered by this Agreement, to accept and be bound by the terms and conditions of this Project Agreement by executing the Letter of Assent (Attachment A) prior to commencing work. The Project Contractor shall assure compliance with this Agreement by the Contractors. It is further agreed that the terms and conditions of this Project Agreement shall supersede and override terms and conditions of any and all other national, area, or local collective bargaining agreements, (including all vertical agreements), except for all work performed under the NTL Articles of Agreement, the National Stack/Chimney Agreement, the National Cooling Tower Agreement, and the National Agreement of the International Union of Elevator Constructors.

1.3 The Contractor agrees to be bound by the terms of the Collective Bargaining Agreements and amendments thereto of the Signatory Union Affiliates and the applicable employers association, if any, with the Signatory Union Affiliates with which it has a present bargaining relationship. If there has previously been no such bargaining relationship, the contractor or subcontractor shall sign and be bound to all such agreements with Signatory Union Affiliates as outlined in the scope of work in the required pre-job conference. Such agreements are incorporated herein by reference. In order to comply with the requirements of the various fringe benefit funds to which the Contractor is to contribute, the Contractor shall sign such participation agreements as are necessary and will honor the fringe benefit collection procedures as required by the Collective Bargaining Agreement with the Signatory Union Affiliate.

1.4 The Contractor and the Union agree that should the Collective Bargaining Agreement (CBA) of any Signatory Union Affiliate expire prior to the completion of this project, the expired contracts' terms will be maintained until a new CBA is ratified. The wages, and fringe benefits included in any new CBA will be effective on the effective date of the newly negotiated CBA unless wage and fringe benefit retroactivity is agreed upon by the bargaining parties.

1.5 Nothing contained herein shall be construed to prohibit, restrict or interfere with the performance of any other operation work, or function which may occur at the Project site or be associated with the development of the Project.

1.6 This Agreement shall only be binding on the signatory parties hereto and shall not apply to their parents, affiliates, subsidiaries, or Non-Signatory Union Affiliates.

1.7 The Owner and/or the Project Contractor have the absolute right to select any qualified bidder for the award of contracts on this Project without reference to the existence or nonexistence of any agreements between such bidder and any party to this Agreement; provided, however, only that such bidder is willing, ready and able to become a party to and comply with this Project Agreement, should it be designated the successful bidder.

1.8 Items specifically excluded from the scope of this Agreement include but are not limited to the following: [list all items to be excluded].

1.9 The provisions of this Project Agreement shall not apply to _____(Owner), and nothing contained herein shall be construed to prohibit or restrict _____(Owner) or its employees from performing work not covered by this Project Agreement on the Project site. As areas and systems of the Project are inspected and construction tested by the Project Contractor or Contractors and accepted by the Owner, the Project Agreement will not have further force or effect on such items or areas, except when the Project Contractor or Contractors are directed by the Owner to engage in repairs, modifications, check-out, and warranty functions required by its contract with the Owner during the term of this Agreement.

1.10 It is understood that the Owner, at its sole option, may terminate, delay and/or suspend any or all portions of the Project at any time.

1.11 It is understood that the liability of any employer and the liability of a Signatory Union Affiliate and the SIBTC under this Agreement shall be several and not joint. Provided that the SIBTC or a Signatory Union Affiliate comply with their own obligations under this Agreement, the SIBTC and non-breaching Signatory Union Affiliates will not be liable for a breach of this Agreement by a breaching Signatory Union Affiliate or any action taken by a Non-Signatory Union Affiliate. The Union agrees that this Agreement does not have the effect of creating any joint employer status between or among the Owner, Contractor(s) or any employer.

1.12 Each affiliate union of the SIBTC representing employees engaged in construction work covered by this Agreement shall be requested to sign the "Union Letter of Assent", in the form attached hereto; provided, that the failure of any affiliate union to sign such Union Letter of Assent prior to commencement of construction work shall not diminish the applicability of this Agreement to the SIBTC and the union affiliates which have signed a Union Letter of Assent. Affiliates unions that have signed the Union Letter of Assent will be referred to as "Signatory Union Affiliates" and affiliate

RETURN TO AGENDA

unions that have not signed the Union Letter of Assent will be referred to as "Non-Signatory Union Affiliates."

ARTICLE II - RECOGNITION

2.1 The Contractor recognizes the SIBTC and the Signatory Union Affiliates as the sole and exclusive bargaining representatives for its craft employees employed on the job site. Signatory Union Affiliates will have recognition on the project for their craft.

ARTICLE III - ADMINISTRATION OF AGREEMENT

3.1 In order to assure that all parties have a clear understanding of the Agreement, to promote harmony and address potential problems, a pre-job conference will be held with the Contractor, SIBTC Representatives and all signatory parties prior to the start of any work on the project.

3.2 Representatives of the Contractor and the Union shall meet as required but not less than once a month to review the operation of this Agreement. The representatives at this meeting shall be empowered to resolve any dispute over the intent and application of the Agreement.

3.3 The Contractor shall make available in writing to the Union no less than one week prior to these meetings a job status report, planned activities for the next 30 day period, actual numbers of craft employees on the project and estimated numbers of employees by craft required for the next 30 day period. The purpose of this report is to allow time to address any potential jurisdictional problems and to ensure that no party signatory to the Agreement is hindering the continuous progress of the project through a lack of planning or shortage of manpower.

ARTICLE IV - HOURS OF WORK OVERTIME SHIFTS & HOLIDAYS

4.1 The standard work day shall be an established consecutive eight (8) hour period between the hours of 7:00 a.m. and 5:00 p.m. with one-half hour designated as unpaid period for lunch. The standard work week shall be five (5) consecutive days of work commencing on Monday. Starting time which is to be established at the pre-job conference will be applicable to all craft employees on the project. Should job conditions dictate a change in the established starting time and/or a staggered lunch period on certain work of the project or with individual crafts, the Contractor, Business Managers of the Signatory Union Affiliates involved and the SIBTC shall mutually agree to such changes. If work schedule change cannot be mutually agreed to between these parties, the hours fixed in the Agreement shall prevail.

4.2 All time before and after the established work day of eight (8) hours, Monday through Friday and all time on Saturday shall be paid in accordance with each crafts current collective bargaining agreement. All time on Sundays and Holidays shall be paid for at the rate of double time.

(a) Fringe benefit payments for all overtime work shall be paid in accordance with each Signatory Union Affiliate's current Collective Bargaining Agreement.

RETURN TO AGENDA

4.3 Shift work, if used, shall be as provided in the collective bargaining agreement of each affected Signatory Union Affiliate.

4.4 Recognized Holidays shall be as follows: New Year's Day, Memorial Day, Fourth of July, Labor Day, Veterans Day *(to be celebrated on November 11)*, Thanksgiving Day and Christmas Day. No work will be performed on Labor Day under any consideration, except in an extreme emergency and then only after consent is given by the Business Manager of the Signatory Union Affiliates.

ARTICLE V - ABSENTEEISM

5.1 The Contractor and the Union agree that chronic and/or unexcused absenteeism is undesirable and must be controlled. Employees that develop a record of such absenteeism shall be identified by the Contractor to the appropriate referral facility and the Contractor shall support such action with the work record of the involved employee. Any employee terminated for such absenteeism shall not be eligible for rehire on the project for a period of no less than ninety (90) days.

ARTICLE VI-MANAGEMENT RIGHTS

6.1 The Contractor retains and shall exercise full and exclusive authority and responsibility for the management of its operations, except as expressly limited by the terms of this Agreement and the collective bargaining agreements of the Signatory Union Affiliates.

ARTICLE VII - GENERAL WORKING CONDITIONS

7.1 Employment begins and ends at the project site, to be determined at the Pre-Job Conference.

7.2 Employees shall be at their place of work at the starting time and shall remain at their place of work until quitting time. The parties reaffirm their policy of a fair day's work for a fair day's pay.

7.3 The Contractor may utilize brassing, or other systems to check employees in and out. Should such procedures be required, the techniques and rules regarding such procedures shall be established by mutual consent of the parties at the pre-job conference.

7.4 There shall be no limit on production by workmen nor restrictions on the full use of tools or equipment. Craftsmen using tools shall perform any work of their trade and shall work under the direction of the craft foreman. There shall be no restrictions on efficient use of manpower other than as may be required by safety regulations.

7.5 Crew Foreman shall be utilized as per the existing collective bargaining agreements. The Contractor agrees to allow crew foremen ample time to direct and supervise their crew. The Union agrees there will be no restrictions placed on crew foreman's ability to handle tools and materials.

7.6 The Contractor may utilize the most efficient methods or techniques of construction, tools or other labor saving devices to accomplish the work. Practices not a part of the terms and conditions of this Agreement will not be recognized.

RETURN TO AGENDA

7.7 Should overtime work be required, the Contractor will have the right to assign specific employees and/or crews to perform such overtime work as is necessary to accomplish the work.

7.8 The Contractor may establish such reasonable project rules as the Contractor deems appropriate. These rules will be reviewed and established at the pre-job conference and posted at the project site by the Contractor.

7.9 It is recognized that specialized or unusual equipment may be installed on the project and in such cases, the Union recognizes the right of the Contractor to involve the equipment supplier or vendor's personnel in supervising the setting of the equipment, making modifications and final alignment which may be necessary prior to and during the start-up procedure, in order to protect factory warranties.

7.10 In order to promote a harmonious relationship between the equipment or vendor's personnel and the Building Trades craftsmen, a meeting shall be held between the Contractor and the Unions prior to any involvement on the project by these personnel. The Contractor will inform the Union of the nature of involvement by these personnel and the numbers of personnel to be involved, allowing ample time for the Union representatives to inform their stewards prior to the start of any work.

ARTICLE VIII - SAFETY

8.1 The employees covered the terms of this Agreement shall at all times while in the employ of the Contractor be bound by the safety rules and regulations as established by the Contractor in accordance with the Construction Safety Act and OSHA.

a. These rules and regulations will be published and posted at conspicuous places throughout the project.

8.2 In accordance with the requirements of OSHA, it shall be the exclusive responsibility of each Contractor on a jobsite to which this Agreement applies, to assure safe working conditions for its employees and compliance by them with any safety rules contained herein or established by the Contractor. Nothing in this Agreement will make the SIBTC or any of its affiliates liable to any employees or to other persons in the event that injury or accident occurs.

ARTICLE IX - SUBCONTRACTING

9.1 The Project Contractor agrees that neither it nor any of its contractors or subcontractors will subcontract any work to be done on the Project except to a person, firm or corporation who is or agrees to become party to this Agreement. Any contractor or subcontractor working on the Project shall, as a condition to working on said Project, become signatory to and perform all work under the terms of this Agreement.

ARTICLE X - UNION REPRESENTATION

10.1 Authorized representatives of the SIBTC and its Signatory Union Affiliates shall have access to the project provided they do not interfere with the work of the employees and further provided that such representatives fully comply with the visitor and security rules established for the project.

10.2 Each Signatory Union Affiliate shall have the right to designate a working journeyman as a steward. Such designated steward shall be a qualified worker performing the work of that craft and shall not exercise any supervisory functions. Each steward shall be concerned with the employees of the steward's employer and not with the employees of any other employer.

10.3 The working steward will be paid at the applicable wage rate for the job classification in which he is employed.

10.4 The working steward shall not be discriminated against because of his activities in performing his duties as steward, and except as otherwise provided in local agreements, shall be the last employee in his craft to be laid off in any reduction in force. Stewards will be subject to discharge to the same extent that other employees are only after notification to the Union Representative. The Contractor will permit stewards sufficient time to perform the duties inherent to a steward's responsibilities. Stewards will be offered available overtime work if qualified.

ARTICLE XI - DISPUTES AND GRIEVANCES

11.1 This Agreement is intended to provide close cooperation between management and labor. Each of the Signatory Union Affiliates will assign a representative to this Project for the purpose of completing the construction of the Project economically, efficiently, continuously, and without interruptions, delays, or work stoppages.

11.2 The Contractors, Union, and the employees, collectively and individually, realize the importance to all parties to maintain continuous and uninterrupted performance of the work of the Project, and agree to resolve disputes in accordance with the grievance arbitration provisions set forth in this Article.

11.3 Any question or dispute arising out of and during the term of this Project Agreement (other than trade jurisdictional disputes) shall be considered a grievance and subject to resolution under the following procedures:

Step 1. (a) When any employee subject to the provisions of this Agreement feels he or she is aggrieved by a violation of this Agreement, he or she, through his or her local union business representative or job steward, shall, within five (5) working days after the occurrence of the violation, give notice to the work-site representative of the involved Contractor stating the provision(s) alleged to have been violated. The business representative of the local union or the job steward and the work-site representative of the involved Contractor and the Project Contractor shall meet and endeavor to adjust the matter within three (3) working days after timely notice has been given. The representative of the Contractor shall keep the meeting minutes and shall respond to the Union representative in writing (copying the Project Contractor) at the conclusion of the meeting but not later than twenty-four (24) hours thereafter. If they fail to resolve the matter within the prescribed period, the grieving party may, within forty-eight (48) hours thereafter, pursue Step 2 of the Grievance Procedure, provided the grievance is reduced to writing, setting forth the relevant information concerning the alleged grievance, including a short description thereof, the date on which the grievance occurred, and the provision(s) of the Agreement alleged to have been violated.

(b) Should the Local Union(s) or the Project Contractor or any Contractor have a dispute with the other party and, if after conferring, a settlement is not reached within three (3) working days, the dispute may be reduced to writing and proceed to Step 2 in the same manner as outlined herein for the adjustment of an employee complaint.

Step 2. The International Union Representative and the involved Contractor shall meet within seven (7) working days of the referral of a dispute to this second step to arrive at a satisfactory settlement thereof. Meeting minutes shall be kept by the Contractor. If the parties fail to reach an agreement, the dispute may be appealed in writing in accordance with the provisions of Step 3 within seven (7) calendar days thereafter.

Step 3. (a) If the grievance has been submitted but not adjusted under Step 2, either party may request in writing, within seven (7) calendar days thereafter, that the grievance be submitted to an Arbitrator mutually agreed upon by them. The Contractor and the involved Union shall attempt mutually to select an arbitrator, but if they are unable to do so, they shall request the American Arbitration Association to provide them with a list of arbitrators from which the Arbitrator shall be selected. The rules of the American Arbitration Association shall govern the conduct of the arbitration hearing. The decision of the Arbitrator shall be formal and binding on all parties. The fee and expenses of such Arbitration shall be borne equally by the Contractor and the involved Local Union(s).

(b) Failure of the grieving party to adhere to the time limits established herein shall render the grievance null and void. The time limits established herein may be extended only by written consent of the parties involved at the particular step where the extension is agreed upon. The Arbitrator shall have the authority to make decisions only on issues presented to him or her, and he or she shall not have authority to change, amend, add to or detract from any of the provisions of this Agreement.

11.4 The Project Contractor and Owner shall be notified of all action at Steps 2 and 3 and shall, upon their request, be permitted to participate in all proceedings at these steps.

ARTICLE XII - JURISDICTIONAL DISPUTES

12.1 The assignment of work will be solely the responsibility of the Contractor performing the work involved, in accordance with applicable Collective Bargaining Agreements and past practices. To the extent that past practice is a factor in assigning work under the Project Labor Agreement, including assignments under any collective bargaining agreements to which any of the signatory contractors hereto may be a party, the practice to be applied shall be that followed within the geographical area encompassed by the Southwestern Illinois Building and Construction Trades Council. The practice followed in any other geographical area, even though a Union signatory to this Project Labor Agreement may also represent employees in that area, shall not be a factor in the assignment. All jurisdictional disputes between or among Building and Construction Trades Unions and employees and the Contractor, parties to this Agreement, shall be settled and adjusted according to the present Plan established by the Building and Construction Trades Department or any other plan or method of procedure that may be adopted in the future by the Building and Construction Trades Department. Decisions rendered shall be final, binding and conclusive on the Contractor and Union parties to this Agreement.

12.2 All jurisdictional disputes shall be resolved without the occurrence of any strike, work stoppage, or slow-down of any nature, and the Contractor's assignment shall be adhered to until the dispute is resolved. Individuals violating this section shall be subject to immediate discharge.

12.3 Each Contractor will conduct a pre-job conference with the appropriate Building and Construction Trades Council prior to commencing work. The Project Contractor and the Owner will be advised in advance of all such conferences and may participate if they wish.

RETURN TO AGENDA

ARTICLE XIII - WORK STOPPAGES AND LOCKOUTS

13.1 During the term of this Agreement there shall be no strikes, picketing, work stoppages, slow downs or other disruptive activity for any reason by the SIBTC, its Signatory Union Affiliates or by any employee and there shall be no lockout by the Contractor. Failure of any Signatory Union Affiliate or employee to cross any picket line established at the project site is a violation of this Article.

13.2 The SIBTC and its Signatory Union Affiliates shall not sanction, aid or abet, encourage or continue any work stoppage, picketing or other disruptive activity and will not make any attempt of any kind to dissuade others from making deliveries to or performing services for or otherwise doing business with the Contractor at the project site. Should any of these prohibited activities occur the SIBTC and the Signatory Union Affiliates will take the necessary action to end such prohibited activities.

13.3 No employee shall engage in any activities which violate this Article. Any employee who participates in or encourages any activities which interfere with the normal operation of the project shall be subject to disciplinary action, including discharge, and if justifiably discharged for the above reasons, shall not be eligible for rehire on the same project for a period of not less than ninety (90) days.

13.4 Neither the SIBTC nor its Signatory Union Affiliates, will be liable for acts of employees for whom it has no responsibility. The principal officer or officers of the SIBTC will immediately instruct, order and use the best efforts of his office to cause Signatory Union Affiliates to cease any violations of this Article. The SIBTC in its compliance with this obligation shall not be liable for unauthorized acts of Signatory Union Affiliates or Non-Signatory Union Affiliates. The principal officer or officers of any involved Signatory Union Affiliate will immediately instruct, order or use the best effort of his office to cause the employees the union represents to cease any violations of this Article. A union complying with this obligation shall not be liable for unauthorized acts of employees it represents. The failure of the Contractor to exercise its right in any instance shall not be deemed a waiver of its right in any other instance.

13.5 In lieu of any action at law or equity, any party shall institute the following procedure when a breach of this Article is alleged, after all involved parties have been notified of the fact.

a. The party invoking this procedure shall notify _____, whom the parties agree shall be the permanent arbitrator under this procedure. In the event the permanent arbitrator is unavailable at any time, he shall appoint his alternate. Notice to the arbitrator shall be by the most expeditious means available, with notice by telegram or any effective written means to the party alleged to be in violation and all involved parties.

b. Upon receipt of said notice the arbitrator named above shall set and hold a hearing within twenty-four (24) hours if it is contended the violation still exists but not before twenty-four (24) hours after the telegraph notice to all parties involved as required above.

c. The Arbitrator shall notify the parties by telegram or any other effective written means, of the place and time he has chosen for this hearing. Said hearing shall be completed in one session. A failure of any party or parties to attend said hearing shall not delay the hearing of evidence or issuance of an Award by the Arbitrator.

d. The sole issue at the hearing shall be whether or not a violation of this Article has in fact occurred. The Award shall be issued in writing within three (3) hours after the close of the hearing, and may be issued without an Opinion. If any party desires an Opinion, one shall be issued within fifteen (15) days, but its issuance shall not delay compliance with, or enforcement of, the Award. The Arbitrator may order cessation of the violation of this Article, and such Award shall be served on all parties by hand or registered mail upon issuance.

e. Such Award may be enforced by any court of competent jurisdiction upon the filing of the Agreement and all other relevant documents referred to herein above in the following manner. Telegraphic notice of the filing of such enforcement proceedings shall be given to the other party. In the proceeding to obtain a temporary order enforcing the Arbitrator's Award as issued under Section 13.5 of this Article, all parties waive the right to a hearing and agree that such proceedings may be exparte. Such agreement does not waive any party's right to participate in a hearing for a final order of enforcement. The Court's order or orders enforcing the Arbitrator's Award shall be served on all parties by hand or by delivery to their last known address or by registered mail.

f. Any rights created by statue or law governing arbitration proceedings inconsistent with the above procedure or which interfere with compliance therewith are hereby waived by parties to whom they accrue.

g. The fees and expenses of the Arbitrator shall be borne by the party or parties found in violation, or in the event no violation is found, such fees and expenses shall be borne by the moving party.

h. If the Arbitrator determines in accordance with Section 13.5 that the SIBTC or a Signatory Union Affiliate has violated Article XIII, the SIBTC or the Signatory Union Affiliate shall, within eight (8) hours of receipt of this Award, direct all employees they represent at the project to immediately return to work. If the employees do not return to work at the beginning of the next regularly scheduled shift following receipt of the Arbitrator's Award, and the SIBTC or Signatory Union Affiliate have not complied with Section 13.4 above, then the SIBTC or the Signatory Union Affiliate which has not complied with Section 13.4 shall pay the sum of ten thousand dollars ($10,000) as liquidated damages to the affected owner, and shall pay an additional ten thousand dollars ($10,000) per shift for each shift thereafter on which the employees have not returned to work. The Arbitrator shall retain jurisdiction to determine compliance with this Section and Section 13.4, and to assess liquidated damages.

RETURN TO AGENDA

ARTICLE XIV - GENERAL SAVINGS CLAUSE

14.1 If any Article or provision of this Agreement shall be declared invalid, inoperative or unenforceable by operation of law or by any of the above mentioned tribunals of competent jurisdiction, the remainder of this Agreement or the application of such Article or provision to persons or circumstances other than those as to which it has been held invalid, inoperative or unenforceable shall not be affected thereby.

ARTICLE XV - TERM OF AGREEMENT

15.1 This Agreement shall be in full force as of and from the date of the Notice of Award to the Final Acceptance of all applicable contractors.

IN WITNESS WHEREOF, the respective duly authorized representatives of the parties hereto have executed this Agreement on the date set forth opposite their respective signatures.

Date: _____

_____
(Contractor Representative)

_____
(Firm's Name)

_____
(Firm's Address)

_____

_____
(Phone Number)

Date: _____

_____
Dale Stewart, Exec. Sec.-Treas.
Southwestern Illinois Building &
Construction Trades Council
2A Meadow Heights Professional Park
Collinsville, IL 62234

RETURN TO AGENDA

ATTACHMENT A
(CONTRACTOR LETTER OF ASSENT)

Note: All contractors of whatever tier (except those construction contractors who have directly signed the Agreement) shall execute the following Letter of Assent prior to commencing work.

==========

CONTRACTOR LETTERHEAD

DATE

To: (Name of Owner)
(Address of Owner)

RE: _____ *Construction Project Agreement*

Dear Sir:

Pursuant to Article I, Section 1.2, of the above reference Agreement, the undersigned contractor hereby agrees that it will be bound by and comply with all terms and conditions of said Project Labor Agreement, and any amendments thereto.

This Letter of Assent will remain in effect for the duration of the Agreement, and any extensions, after which this understanding will automatically terminate, except as provided for in Article I, Section 1.9, of the Agreement.

Sincerely,

_____
(Name of Contractor of Subcontractor)

*By:*_____

*Title:*_____

RETURN TO AGENDA

INSTRUCTION TO BIDDERS

Award of Contract

The general contract will be awarded to the lowest responsible and eligible general bidder complying with the conditions and requirements provided in these instructions, the bid forms and the other bid documents. A "responsible" bidder is a bidder demonstrably possessing the skill, ability and integrity necessary to faithfully perform the work called for by the contract, based upon a determination of competent workmanship and financial soundness. An "eligible" bidder is a bidder who is not debarred from bidding under any applicable law, and who shall certify that he is able to furnish labor that can work in harmony with all other elements of labor employed or to be employed on the project. In the interests of such harmony, the long-term supply of skilled manpower, and to provide a legally enforceable means of assuring labor stability and labor peace over the life of the project, each successful bidder and any and all levels of subcontractors, as a condition of being awarded a contract or subcontract, shall be required to enter into a Project Labor Agreement for the project known as:_____

_____

located in the (Municipality) with the Southwestern Illinois Building and Construction Trades Council, AFL-CIO, and its Signatory Affiliated Local Unions for the development and construction of the Project, and will be bound by the provisions of that agreement in the same manner as any other provision of the contract.

RETURN TO AGENDA

INDEX
FOR
SUPPLEMENTAL SPECIFICATIONS
AND RECURRING SPECIAL PROVISIONS

Adopted January 1, 2015

This index contains a listing of SUPPLEMENTAL SPECIFICATIONS, frequently used RECURRING SPECIAL PROVISIONS, and LOCAL ROADS AND STREETS RECURRING SPECIAL PROVISIONS.

ERRATA Standard Specifications for Road and Bridge Construction (Adopted 1-1-12) (Revised 1-1-15)

SUPPLEMENTAL SPECIFICATIONS

Std. Spec. Sec.		Page No.
101	Definition of Terms	1
102	Advertisement, Bidding, Award, and Contract Execution	2
105	Control of Work	3
106	Control of Materials	5
107	Legal Regulations and Responsibility to Public	6
108	Prosecution and Progress	14
109	Measurement and Payment	15
202	Earth and Rock Excavation	17
211	Topsoil and Compost	19
250	Seeding	20
253	Planting Woody Plants	21
280	Temporary Erosion and Sediment Control	23
312	Stabilized Subbase	24
406	Hot-Mix Asphalt Binder and Surface Course	25
407	Hot-Mix Asphalt Pavement (Full-Depth)	28
420	Portland Cement Concrete Pavement	32
424	Portland Cement Concrete Sidewalk	34
440	Removal of Existing Pavement and Appurtenances	35
502	Excavation for Structures	36
503	Concrete Structures	37
504	Precast Concrete Structures	40
506	Cleaning and Painting New Steel Structures	41
512	Piling	42
516	Drilled Shafts	43
521	Bearings	44
540	Box Culverts	45
588	Bridge Relief Joint System	46
589	Elastic Joint Sealer	48
602	Catch Basin, Manhole, Inlet, Drainage Structure, and Valve Vault Construction, Adjustment, and Reconstruction	49
603	Adjusting Frames and Grates of Drainage and Utility Structures	50
606	Concrete Gutter, Curb, Median, and Paved Ditch	52
610	Shoulder Inlets with Curb	53
639	Precast Prestressed Concrete Sight Screen	54
642	Shoulder Rumble Strips	55

RETURN TO AGENDA

643	Impact Attenuators	56
644	High Tension Cable Median Barrier	58
669	Removal and Disposal of Regulated Substances	60
670	Engineer's Field Office and Laboratory	64
701	Work Zone Traffic Control and Protection	65
706	Impact Attenuators, Temporary	68
707	Movable Traffic Barrier	71
708	Temporary Water Filled Barrier	73
730	Wood Sign Support	75
780	Pavement Striping	76
816	Unit Duct	81
836	Pole Foundation	82
860	Master Controller	83
1001	Cement	84
1003	Fine Aggregates	85
1004	Coarse Aggregates	87
1006	Metals	91
1011	Mineral Filler	93
1017	Packaged, Dry, Combined Materials for Mortar	94
1018	Packaged Rapid Hardening Mortar or Concrete	95
1019	Controlled Low-Strength Material (CLSM)	96
1020	Portland Cement Concrete	97
1024	Grout and Nonshrink Grout	136
1030	Hot-Mix Asphalt	137
1040	Drain Pipe, Tile, Drainage Mat, and Wall Drain	142
1042	Precast Concrete Products	143
1069	Pole and Tower	144
1070	Foundation and Breakaway Devices	145
1073	Controller	146
1081	Materials for Planting	147
1082	Preformed Bearing Pads	148
1083	Elastomeric Bearings	149
1088	Wireway and Conduit System	150
1095	Pavement Markings	152
1101	General Equipment	155
1102	Hot-Mix Asphalt Equipment	157
1103	Portland Cement Concrete Equipment	159
1105	Pavement Marking Equipment	160
1106	Work Zone Traffic Control Devices	161

RETURN TO AGENDA

RECURRING SPECIAL PROVISIONS

The following RECURRING SPECIAL PROVISIONS indicated by an "X" are applicable to this contract and are included by reference:

CHECK SHEET #		PAGE NO.
1	Additional State Requirements for Federal-Aid Construction Contracts	163
2	Subletting of Contracts (Federal-Aid Contracts)	166
3	EEO	167
4	Specific EEO Responsibilities Non Federal-Aid Contracts	177
5	Required Provisions - State Contracts	182
6	Asbestos Bearing Pad Removal	188
7	Asbestos Waterproofing Membrane and Asbestos HMA Surface Removal	189
8	Temporary Stream Crossings and In-Stream Work Pads	190
9	Construction Layout Stakes Except for Bridges	191
10	Construction Layout Stakes	194
11	Use of Geotextile Fabric for Railroad Crossing	197
12	Subsealing of Concrete Pavements	199
13	Hot-Mix Asphalt Surface Correction	203
14	Pavement and Shoulder Resurfacing	205
15	Reserved	206
16	Patching with Hot-Mix Asphalt Overlay Removal	207
17	Polymer Concrete	208
18	PVC Pipeliner	210
19	Pipe Underdrains	211
20	Guardrail and Barrier Wall Delineation	212
21	Bicycle Racks	216
22	Reserved	218
23	Temporary Portable Bridge Traffic Signals	219
24	Work Zone Public Information Signs	221
25	Nighttime Inspection of Roadway Lighting	222
26	English Substitution of Metric Bolts	223
27	English Substitution of Metric Reinforcement Bars	224
28	Calcium Chloride Accelerator for Portland Cement Concrete	225
29	Reserved	226
30	Quality Control of Concrete Mixtures at the Plant	227
31	Quality Control/Quality Assurance of Concrete Mixtures	235
32	Digital Terrain Modeling for Earthwork Calculations	251
33	Pavement Marking Removal	253
34	Preventive Maintenance – Bituminous Surface Treatment	254
35	Preventive Maintenance – Cape Seal	260
36	Preventive Maintenance – Micro-Surfacing	275
37	Preventive Maintenance – Slurry Seal	286
38	Temporary Raised Pavement Markers	296
39	Restoring Bridge Approach Pavements Using High-Density Foam	297

RETURN TO AGENDA

LOCAL ROADS AND STREETS RECURRING SPECIAL PROVISIONS

Table of Contents

CHECK SHEET #		PAGE NO.
LRS1	Reserved	301
LRS2	Furnished Excavation	302
LRS3	Work Zone Traffic Control Surveillance	303
LRS4	Flaggers in Work Zones	304
LRS5	Contract Claims	305
LRS6	Bidding Requirements and Conditions for Contract Proposals	306
LRS7	Bidding Requirements and Conditions for Material Proposals	312
LRS8	Reserved	318
LRS9	Bituminous Surface Treatments	319
LRS10	Reserved	320
LRS11	Employment Practices	321
LRS12	Wages of Employees on Public Works	323
LRS13	Selection of Labor	325
LRS14	Paving Brick and Concrete Paver Pavements and Sidewalks	326
LRS15	Partial Payments	329
LRS16	Protests on Local Lettings	330
LRS17	Substance Abuse Prevention Program	331
LRS18	Multigrade Cold Mix Asphalt	332

RETURN TO AGENDA

State of Illinois
Department of Transportation

ERRATA
STANDARD SPECIFICATIONS FOR ROAD AND BRIDGE CONSTRUCTION

Adopted: January 1, 2012
Revised: January 1, 2015

Page 1	Article 101.01. Add the following to the list of abbreviations: "ACI American Concrete Institute; ITP Illinois Test Procedure".
Page 155	Article 312.07. In Note 2 change "Illinois Modified AASHTO T 27/T 11" to "ITP 27 / 11".
Page 159	Article 312.16. In Note 1 change "Illinois Modified AASHTO T 27 / T 11" to "ITP 27 / 11".
Page 166	Article 312.26. In the eighth line of the second paragraph change "Illinois Modified AASHTO T 161 Procedure B" to "ITP 161".
Page 182	Article 354.12. In the second line of the first paragraph change "Article 353.12" to "Article 353.13".
Page 183	Article 355.10. In the second line of the first paragraph change "Article 353.12" to "Article 353.13".
Page 185	Article 356.10. In the second line of the first paragraph change "Article 353.12" to "Article 353.13".
Page 216	Article 407.10. In the eighth and ninth lines of the first paragraph change the two occurrences of "(125 m)" to "(150 m)".
Page 256	Article 442.02. In the first sentence of Note 1. change "Class PP-2, PP-3, or PP-4" to "Class PP-2, PP-3, PP-4, or PP-5".
Page 256	Article 442.02. In the second sentence of Note 1. change "Class PP-1, PP-2, PP-3, or PP-4" to "Class PP-1, PP-2, PP-3, PP-4, or PP-5".
Page 328	Article 505.04(f)(2). In the third sentence of the first paragraph change "Specification for Structural Joints Using ASTM A 325 (A 325M) or A 490 (A 490M) Bolts" to "Specification for Structural Joints Using High-Strength Bolts".
Page 329	Article 505.04(f)(2). In the first sentence of the third paragraph change "Specifications for Structural Joints using ASTM A 325 (A 325M) or A 490 (A 490M) Bolts" to "Specification for Structural Joints Using High-Strength Bolts".

RETURN TO AGENDA

Page 331	Article 505.04(f)(2)b. In the first sentence of the first paragraph change "Specifications for Structural Joints using ASTM A 325 (A 325M) or A 490 (A 490M) Bolts" to "Specification for Structural Joints Using High-Strength Bolts".
Page 331	Article 505.04(f)(2)c. In the first sentence of the first paragraph change "Specifications for Structural Joints using ASTM A 325 (A 325M) or A 490 (A 490M) Bolts" to "Specification for Structural Joints Using High-Strength Bolts".
Page 331	Article 505.04(f)(2)c. In the first line of the second paragraph change "AASHTO M 293" to "ASTM F 436 (F 436M)".
Page 332	Article 505.04(f)(2)d. In the first sentence of the first paragraph change "Specifications for Structural Joints using ASTM A 325 (A 325M) or A 490 (A 490M) Bolts" to "Specification for Structural Joints Using High-Strength Bolts".
Page 333	Article 505.04(f)(3)b.1. In the second line of the first paragraph change "AASHTO M 164 (M 164M)" to "ASTM A 325 (A 325M)".
Page 337	Article 505.04. Revise the subparagraph "(i) Match Making." to "(i) Match Marking.".
Page 339	Article 505.04(n). In the tenth line of the first paragraph change "506.04(h)" to "506.09(k)".
Page 341	Article 505.04(q)(1)a. In Row 3 of the English table change "M 233" to "M 222".
Page 355	Article 505.10. In the second line of the first paragraph change "506.03 and 506.05" to "506.07 and 506.10".
Page 360	Article 506.07. In the first line of the second paragraph change "AASHTO/AWS D1.5/D1.5:" to "AASHTO/AWS D1.5M/D1.5:".
Page 361	Article 506.08. In the third line of the sixth paragraph change "506.08(a)" to "506.08(b)".
Page 376	Article 508.04. In the last line of the second paragraph change "AASHTO M 317" to "ASTM D 3963/D 3963M".
Page 378	Article 508.06(b). In the last line of the second paragraph change "AASHTO M 284" to "ASTM A 775".
Page 378	Article 508.06(c). In the second line of the second paragraph change "AASHTO M 284" to "ASTM A 775".
Page 408	Article 520.08. In the second line of the fourth paragraph change "506.05" to "506.10(c)".

RETURN TO AGENDA

Page 409	Article 521.03. In the third line of the first paragraph change "506.05" to "506.09".
Page 410	Article 521.06. Revise the second sentence of the first paragraph to read "Side retainers shall be painted or hot-dip galvanized according to Article 506.09.".
Page 522	Article 604.04. In the first line of the third paragraph change "Type 20, 21, and 22," to "Type 21 and 22".
Page 531	Article 609.07. In the first paragraph delete "TYPE B, C, or D INLET BOX STANDARD 609001 or".
Page 595	Article 701.17(e)(2)a. In the fourth line of the first paragraph change "Class PP-2, PP-3, or PP-4" to "Class PP-2, PP-3, PP-4, or PP-5".
Page 601	Article 701.18(h). In the first line of the first paragraph change "Standard 701426." to "Standard 701426 and 701427.".
Page 609	Article 703.05. In the first line of the second paragraph delete "or Type II".
Page 620	Article 727.05. In the first sentence of the first paragraph change "Specifications of Structural Joints using AASHTO M 164 (M 164M) bolts" to "Specification for Structural Joints Using High-Strength Bolts".
Page 673	Article 816.02(b). Change "Coilable Nonmetal Conduit" to "Coilable Nonmetallic Conduit".
Page 693	Section 843. In the heading of this Section change "NAVIGATIONAL" to "NAVIGATION".
Page 727	Article 1001.01(d)(5). In the last line of the first paragraph change "Illinois Modified AASHTO T 161, Procedure B" to "ITP 161".
Page 730	Article 1003.01(b). In the table change "Illinois Modified AASHTO T 104" to "ITP 104", "Illinois Modified AASHTO T 11" to "ITP 11", and "Illinois Modified AASHTO T 21" to "ITP 21".
Page 730	Article 1003.01(b). In footnote 2/ of the table change "Illinois Modified AASHTO T 21" to "ITP 21", and "Illinois Modified AASHTO T 71" to "ITP 71".
Page 733	Article 1003.02(b). In the first sentence of the first paragraph change "Illinois Modified AASHTO T 11" to "ITP 11".
Page 734	Article 1003.05(b). In the second line of the first paragraph change "Illinois Modified AASHTO T 104" to "ITP 104".
Page 735	Article 1004.01(a)(6). In the third sentence of the first paragraph change "Illinois Modified AASHTO T 19" to "ITP 19".

RETURN TO AGENDA

Page 736	Article 1004.01(b). In the table change "Illinois Modified AASHTO T 104" to "ITP 104", "Illinois Modified AASHTO T 96" to "ITP 96", and "Illinois Modified AASHTO T 11" to "ITP 11".
Page 737	Article 1004.01(b). In footnote 9/ of the table change "Illinois Modified AASHTO T 113" to "ITP 113".
Page 738	Article 1004.01(c). In the first table, Coarse Aggregate Gradations, add "9±4" for the percent of CA 12 passing the No. 200 sieve.
Page 747	Article 1005.01(b)(1). In the table change "Illinois Modified AASHTO T 104" to "ITP 104".
Page 751	Article 1006.06(a). In the sixth line of the first paragraph change "AASHTO M 298" to ASTM B 695".
Page 751	Article 1006.08. In the second line of the first paragraph change "AASHTO M 164 (M 164M)" to "ASTM A 325 (A 325M)".
Page 751	Article 1006.08. In the first sentence of the first paragraph change "Specifications for Structural Joints using AASHTO M 164 (M 164M) Bolts" to "Specification for Structural Joints Using High-Strength Bolts".
Page 751	Article 1006.08(a). In the first sentence of the first paragraph change "AASHTO M 298" to "ASTM B 695", and in the third sentence change "AASHTO M 291 (M291M)" to "ASTM A 563 (A 563M)".
Page 752	Article 1006.08(c). In the second line of the first paragraph change "AASHTO M 164 (M 164M)" to "ASTM A 325 (A 325M)".
Page 754	Article 1006.10(a)(2). In the last line of the first paragraph change "AASHTO M 284 (M 284M)" to "ASTM A 775/A 775M".
Page 755	Article 1006.11(b). In the ninth line of the first paragraph change "AASHTO M 284" to "ASTM A 775/A 775M".
Page 758	Article 1006.26(b). In the last line of the last paragraph change "AASHTO M 298" to "ASTM B 695".
Page 759	Article 1006.27(f). In the second line of the first paragraph change "AASHTO M 298" to "ASTM B 695".
Page 759	Article 1006.28(d). In the ninth line of the first paragraph change "AASHTO M 120" to "ASTM B 6".
Page 760	Article 1006.28(d). In the fourth line of the second paragraph change "AASHTO M 120" to "ASTM B 6".
Page 762	Article 1006.29(c)(1). In the second line of the first paragraph change "AASHTO T 68" to "ASTM E 8 (E 8M)".

RETURN TO AGENDA

Page 763 Article 1006.29(d). In the second line of the second paragraph change "AASHTO M 298" to "ASTM B 695".

Page 764 Article 1006.34(b). In the second line of the second paragraph change "AASHTO T 266" to "ASTM E 23".

Page 779 Article 1010.02(a). In the fifth line of the first paragraph change "Illinois Modified AASHTO T 27" to "ITP 27".

Page 781 Article 1012.01. In the second table change "ILLINOIS MODIFIED AASHTO T 27" to "ITP 27".

Page 781 Article 1012.02. In the second table change "ILLINOIS MODIFIED AASHTO T 27" to "ITP 27".

Page 782 Article 1012.03. In the second table change "ILLINOIS MODIFIED AASHTO T 27" to "ITP 27".

Page 782 Article 1013.02. In the second line of the first paragraph change "AASHTO M 143" to "ASTM D 632".

Page 815 Article 1020.14(d). In the second line of the first paragraph change "AASHTO T 309 (M 164M)" to "ASTM C 1064/C 1064M".

Page 815 Article 1021.01. In the third sentence of the fourth paragraph change "Illinois Modified AASHTO T 161, Procedure B" to "ITP 161".

Page 817 Article 1021.06. Revise the title of this Article from "**Reology-Controlling Admixture.**" to "**Rheology-Controlling Admixture.**".

Page 817 Article 1022.01. In the second line of the first paragraph change "AASHTO M 148 (ASTM C 309)" to "ASTM C 309".

Page 818 Article 1022.01(a). In the first sentence of the first paragraph change "AASHTO M 148 (ASTM C 309, Type I, Class A)" to "ASTM C 309, Type I, Class A".

Page 818 Article 1022.01(b). In the first sentence of the first paragraph change "AASHTO M 148 (ASTM C 309, Type I-D, Class B)" to "ASTM C 309, Type I-D, Class B".

Page 818 Article 1022.01(c). In the first sentence of the first paragraph change "AASHTO M 148 (ASTM C 309, Type 2, Class A)" to "ASTM C 309, Type 2, Class A".

Page 819 Article 1022.03. In the third line of the first paragraph change "AASHTO M 171" to "ASTM C 171".

Page 826 Article 1030.04(c). In the sixth line of the third paragraph change "Article 1102.01(a)(11)" to "Article 1102.01(a)(10)".

RETURN TO AGENDA

Page 845	Article 1032.02. In the sixth line of the third paragraph change "60 °F/60 °F (15.6 °C/15.6 °C)" to "60 °F (15.6 °C)".
Page 854	Article 1032.09. Under Tests in the first table change "AASHTO T 47" to "ASTM D 6/D 6M".
Page 855	Article 1032.11. Under Tests in the first table change "AASHTO T 47" to "ASTM D 6/D 6M".
Page 858	Article 1041.01. In the second line of the first paragraph change "AASHTO M 114" to "ASTM C 62".
Page 871	Article 1052.02(d). In the fourth line of the first paragraph change "AASHTO M 164 (M 164M)" to "ASTM A 325 (A 325M)".
Page 872	Article 1053.01. In the second line of the first paragraph change "AASHTO M 220" to "ASTM D 2628".
Page 874	Article 1056.01. In the first sentence of the first paragraph change "AASHTO M 315 (M 315M)" to "ASTM C 443 (C 443M)". In the second sentence of the first paragraph change "AASHTO M 198" to "ASTM C 990 (C 990M)".
Page 875	Article 1060.08. In the third line of the first paragraph change "Fural" to "Furol".
Page 875	Article 1060.08. In the fourth line of the first paragraph change "seconds" to "SFS".
Page 910	Article 1069.02. In the first line of the second paragraph change "ASTM B 210 (B 210M)" to "ASTM B 221 (B 221M) or ASTM B 429 (B 429)".
Page 927	Article 1069.08(k). In the third line of the first paragraph "over current" to "overcurrent".
Page 927	Article 1069.08(k)(11). In the third line of the first paragraph "Over Current" to "overcurrent".
Page 928	Article 1069.08(m). In the third line of the first paragraph change "arrestor" to "arrester".
Page 977	Article 1081.05(a). In the last sentence of the first paragraph change "Illinois Modified AASHTO T 27" to "ITP 27".
Page 989	Article 1083.02(a). In the sixth line of footnote 2/ of the table change "AASHTO R 11" to "ASTM E 29".
Page 989	Article 1083.02(a). In the seventh line of the first paragraph change "Table 14.7.5.2-2" to "Table 14.7.5.2-1".

RETURN TO AGENDA

Page 991	Article 1083.03. In the fourth line of the fourth paragraph change "506.03 and 506.04" to "506.07 and 506.09".
Page 994	Article 1085.01(d). In the second line of the first paragraph change "AASHTO M 183 (M 183M)" to "ASTM A 36/A 36M".
Page 997	Article 1088.01(a)(4). In the first line of the first paragraph change "Nonmetalic" to "Nonmetallic".
Page 1012	Article 1093.02. In the second line of the second paragraph change "AASHTO M 298" to "ASTM B 695".
Page 1017	Article 1094.06. Replace the second sentence with "All structural steel plates and shapes shall be according to AASHTO M 270 Grades 36, 50, or 50 W (M 270M Grades 250, 345, or 345W); AASHTO M 223 Grade 50 (M 223M Grade 345); AASHTO M 222 (M 222M); or ASTM A 36/A 36M."
Page 1019	Article 1095.01(b)(1)e. In the table for daylight reflectance for the color yellow, change "75 % min." to "45 % min.".

RETURN TO AGENDA

BDE SPECIAL PROVISIONS
For the April 22 and June 10, 2016 Lettings

The following special provisions indicated by an "x" are applicable to this contract and will be included by the Project Development and Implementation Section of the BD&E. An * indicates a new or revised special provision for the letting.

	File Name	#		Special Provision Title	Effective	Revised
	80099	1		Accessible Pedestrian Signals (APS)	April 1, 2003	Jan. 1, 2014
*	80274	2		Aggregate Subgrade Improvement	April 1, 2012	April 1, 2016
	80192	3		Automated Flagger Assistance Device	Jan. 1, 2008	
	80173	4	X	Bituminous Materials Cost Adjustments	Nov. 2, 2006	July 1, 2015
	80241	5		Bridge Demolition Debris	July 1, 2009	
	5026I	6		Building Removal-Case I (Non-Friable and Friable Asbestos)	Sept. 1, 1990	April 1, 2010
	5048I	7		Building Removal-Case II (Non-Friable Asbestos)	Sept. 1, 1990	April 1, 2010
	5049I	8		Building Removal-Case III (Friable Asbestos)	Sept. 1, 1990	April 1, 2010
	5053I	9		Building Removal-Case IV (No Asbestos)	Sept. 1, 1990	April 1, 2010
	80360	10		Coarse Aggregate Quality	July 1, 2015	
	80198	11		Completion Date (via calendar days)	April 1, 2008	
	80199	12		Completion Date (via calendar days) Plus Working Days	April 1, 2008	
	80293	13		Concrete Box Culverts with Skews > 30 Degrees and Design Fills ≤ 5 Feet	April 1, 2012	April 1, 2015
*	80311	14		Concrete End Sections for Pipe Culverts	Jan. 1, 2013	April 1, 2016
*	80277	15		Concrete Mix Design – Department Provided	Jan. 1, 2012	April 1, 2016
	80261	16		Construction Air Quality – Diesel Retrofit	June 1, 2010	Nov. 1, 2014
*	80029	17		Disadvantaged Business Enterprise Participation	Sept. 1, 2000	Jan. 2, 2016
*	80363	18		Engineer's Field Office	April 1, 2016	
	80358	19		Equal Employment Opportunity	April 1, 2015	
*	80364	20		Errata for the 2016 Standard Specifications	April 1, 2016	
	80229	21		Fuel Cost Adjustment	April 1, 2009	July 1, 2015
	80304	22		Grooving for Recessed Pavement Markings	Nov. 1, 2012	Aug. 1, 2014
*	80246	23		Hot-Mix Asphalt – Density Testing of Longitudinal Joints	Jan. 1, 2010	April 1, 2016
*	80347	24		Hot-Mix Asphalt – Pay for Performance Using Percent Within Limits – Jobsite Sampling	Nov. 1, 2014	April 1, 2016
*	80336	25		Longitudinal Joint and Crack Patching	April 1, 2014	April 1, 2016
	80045	26		Material Transfer Device	June 15, 1999	Aug. 1, 2014
*	80342	27		Mechanical Side Tie Bar Inserter	Aug. 1, 2014	April 1, 2016
	80165	28		Moisture Cured Urethane Paint System	Nov. 1, 2006	Jan. 1, 2010
*	80361	29		Overhead Sign Structures Certification of Metal Fabricator	Nov. 1, 2015	April 1, 2016
*	80349	30		Pavement Marking Blackout Tape	Nov. 1, 2014	April 1, 2016
*	80298	31		Pavement Marking Tape Type IV	April 1, 2012	April 1, 2016
*	80365	32		Pedestrian Push-Button	April 1, 2016	
*	80359	33		Portland Cement Concrete Bridge Deck Curing	April 1, 2015	April 1, 2016
*	80353	34		Portland Cement Concrete Inlay or Overlay	Jan. 1, 2015	April 1, 2016
*	80338	35		Portland Cement Concrete Partial Depth Hot-Mix Asphalt Patching	April 1, 2014	April 1, 2016
*	80300	36		Preformed Plastic Pavement Marking Type D - Inlaid	April 1, 2012	April 1, 2016
	80328	37		Progress Payments	Nov. 2, 2013	
	3426I	38		Railroad Protective Liability Insurance	Dec. 1, 1986	Jan. 1, 2006
	80157	39		Railroad Protective Liability Insurance (5 and 10)	Jan. 1, 2006	
*	80306	40	X	Reclaimed Asphalt Pavement (RAP) and Reclaimed Asphalt Shingles (RAS)	Nov. 1, 2012	April 1, 2016
*	80340	41		Speed Display Trailer	April 2, 2014	April 1, 2016
	80127	42		Steel Cost Adjustment	April 2, 2004	July 1, 2015
	80362	43		Steel Slag in Trench Backfill	Jan. 1, 2016	
*	80317	44		Surface Testing of Hot-Mix Asphalt Overlays	Jan. 1, 2013	April 1, 2016

RETURN TO AGENDA

File Name	#		Special Provision Title	Effective	Revised
80355	45		Temporary Concrete Barrier	Jan. 1, 2015	July 1, 2015
20338	46		Training Special Provisions	Oct. 15, 1975	
80318	47		Traversable Pipe Grate	Jan. 1, 2013	April 1, 2014
* 80288	48		Warm Mix Asphalt	Jan. 1, 2012	April 1, 2016
80302	49		Weekly DBE Trucking Reports	June 2, 2012	April 2, 2015
80289	50		Wet Reflective Thermoplastic Pavement Marking	Jan. 1, 2012	
80071	51		Working Days	Jan. 1, 2002	

The following special provisions and recurring special provisions are in the 2016 Standard Specifications.

File Name	Special Provision Title	New Location	Effective	Revised
80240	Above Grade Inlet Protection	Articles 280.02, 280.04, and 1081.15	July 1, 2009	Jan. 1, 2012
80310	Coated Galvanized Steel Conduit	Article 811.03	Jan. 1, 2013	Jan. 1, 2015
80341	Coilable Nonmetallic Conduit	Article 1088.01	Aug. 1, 2014	Jan. 1, 2015
80294	Concrete Box Culverts with Skews ≤ 30 Degrees Regardless of Design Fill and Skews > 30 Degrees with Design Fills > 5 Feet	Article 540.04	April 1, 2012	April 1, 2014
80334	Concrete Gutter, Curb, Median, and Paved Ditch	Articles 606.02, 606.07, and 1050.04	April 1, 2014	Aug. 1, 2014
80335	Contract Claims	Article 109.09	April 1, 2014	
Chk Sht #27	English Substitution of Metric Reinforcement Bars	Article 508.09	April 1, 1996	Jan. 1, 2011
80265	Friction Aggregate	Articles 1004.01 and 1004.03	Jan. 1, 2011	Nov. 1, 2014
80329	Glare Screen	Sections 638 and 1085	Jan. 1, 2014	
Chk Sht #20	Guardrail and Barrier Wall Delineation	Sections 635, 725, 782, and 1097	Dec. 15, 1993	Jan. 1, 2012
80322	Hot-Mix Asphalt – Mixture Design Composition and Volumetric Requirements	Sections 312, 355, 406, 407, 442, 482, 601, 1003, 1004, 1030, and 1102	Nov. 1, 2013	Nov. 1, 2014
80323	Hot-Mix Asphalt – Mixture Design Verification and Production	Sections 406, 1030, and 1102	Nov. 1, 2013	Nov. 1, 2014
80348	Hot-Mix Asphalt – Prime Coat	Sections 403, 406, 407, 408, 1032, and 1102	Nov. 1, 2014	
80315	Insertion Lining of Culverts	Sections 543 and 1029	Jan. 1, 2013	Nov. 1, 2013
80351	Light Tower	Article 1069.08	Jan. 1, 2015	
80324	LRFD Pipe Culvert Burial Tables	Sections 542 and 1040	Nov. 1, 2013	April 1, 2015
80325	LRFD Storm Sewer Burial Tables	Sections 550 and 1040	Nov. 1, 2013	April 1, 2015
80337	Paved Shoulder Removal	Article 440.07	April 1, 2014	
80254	Pavement Patching	Article 701.17	Jan. 1, 2010	
80352	Pavement Striping - Symbols	Article 780.14	Jan. 1, 2015	
Chk Sht #19	Pipe Underdrains	Section 601 and Articles 1003.01, 1003.04, 1004.05, 1040.06, and 1080.05	Sept. 9, 1987	Jan. 1, 2007
80343	Precast Concrete Handhole	Articles 814.02, 814.03, and 1042.17	Aug. 1, 2014	
80350	Retroreflective Sheeting for Highway Signs	Article 1091.03	Nov. 1, 2014	
80327	Reinforcement Bars	Section 508 and Articles 421.04, 442.06, 1006.10	Nov. 1, 2013	
80344	Rigid Metal Conduit	Article 1088.01	Aug. 1, 2014	
80354	Sidewalk, Corner, or Crosswalk Closure	Article 1106.02	Jan. 1, 2015	April 1, 2015
80301	Tracking the Use of Pesticides	Article 107.23	Aug. 1, 2012	
80356	Traffic Barrier Terminals Type 6 or 6B	Article 631.02	Jan. 1, 2015	
80345	Underpass Luminaire	Articles 821.06 and 1067.04	Aug. 1, 2014	April 1, 2015

RETURN TO AGENDA

File Name	Special Provision Title	New Location	Effective	Revised
80357	Urban Half Road Closure with Mountable Median	Articles 701.18, 701.19, and 701.20	Jan. 1, 2015	July 1, 2015
80346	Waterway Obstruction Warning Luminaire	Article 1067.07	Aug. 1, 2014	April 1, 2015

The following special provisions require additional information from the designer. The additional information needs to be included in a separate document attached to this check sheet. The Project Development and Implementation section will then include the information in the applicable special provision. The Special Provisions are:

- Bridge Demolition Debris
- Building Removal-Case I
- Building Removal-Case II
- Building Removal-Case III
- Building Removal-Case IV
- Completion Date
- Completion Date Plus Working Days
- DBE Participation
- Material Transfer Device
- Railroad Protective Liability Insurance
- Training Special Provisions
- Working Days

RETURN TO AGENDA

BITUMINOUS MATERIALS COST ADJUSTMENTS (BDE) (RETURN FORM WITH BID)

Effective: November 2, 2006
Revised: July 1, 2015

Description. Bituminous material cost adjustments will be made to provide additional compensation to the Contractor, or credit to the Department, for fluctuations in the cost of bituminous materials when optioned by the Contractor. The bidder shall indicate on the attached form whether or not this special provision will be part of the contract and submit the completed form with his/her bid. Failure to submit the form, or failure to fill out the form completely, shall make this contract exempt of bituminous materials cost adjustments.

The adjustments shall apply to permanent and temporary hot-mix asphalt (HMA) mixtures, bituminous surface treatments (cover and seal coats), and preventative maintenance type surface treatments that are part of the original proposed construction, or added as extra work and paid for by agreed unit prices. The adjustments shall not apply to bituminous prime coats, tack coats, crack filling/sealing, joint filling/sealing, or extra work paid for at a lump sum price or by force account.

Method of Adjustment. Bituminous materials cost adjustments will be computed as follows.

$CA = (BPI_P - BPI_L) \times (\%AC_V / 100) \times Q$

Where: CA = Cost Adjustment, $.

BPI_P = Bituminous Price Index, as published by the Department for the month the work is performed, $/ton ($/metric ton).

BPI_L = Bituminous Price Index, as published by the Department for the month prior to the letting for work paid for at the contract price; or for the month the agreed unit price letter is submitted by the Contractor for extra work paid for by agreed unit price, $/ton ($/metric ton).

$\%AC_V$ = Percent of virgin Asphalt Cement in the Quantity being adjusted. For HMA mixtures, the % AC_V will be determined from the adjusted job mix formula. For bituminous materials applied, a performance graded or cutback asphalt will be considered to be 100% AC_V and undiluted emulsified asphalt will be considered to be 65% AC_V.

Q = Authorized construction Quantity, tons (metric tons) (see below).

For HMA mixtures measured in square yards: Q, tons = $A \times D \times (G_{mb} \times 46.8) / 2000$. For HMA mixtures measured in square meters: Q, metric tons = $A \times D \times (G_{mb} \times 1) / 1000$. When computing adjustments for full-depth HMA pavement, separate calculations will be made for the binder and surface courses to account for their different G_{mb} and % AC_V.

For bituminous materials measured in gallons: Q, tons = V x 8.33 lb/gal x SG / 2000
For bituminous materials measured in liters: Q, metric tons = V x 1.0 kg/L x SG / 1000

Where: A = Area of the HMA mixture, sq yd (sq m).

RETURN TO AGENDA

D = Depth of the HMA mixture, in. (mm).
G_{mb} = Average bulk specific gravity of the mixture, from the approved mix design.
V = Volume of the bituminous material, gal (L).
SG = Specific Gravity of bituminous material as shown on the bill of lading.

Basis of Payment. Bituminous materials cost adjustments may be positive or negative but will only be made when there is a difference between the BPI_L and BPI_P in excess of five percent, as calculated by:

$$\text{Percent Difference} = \{(BPI_L - BPI_P) \div BPI_L\} \times 100$$

Bituminous materials cost adjustments will be calculated for each calendar month in which applicable bituminous material is placed; and will be paid or deducted when all other contract requirements for the work placed during the month are satisfied. The adjustments shall not apply during contract time subject to liquidated damages for completion of the entire contract.

RETURN TO AGENDA

Return With Bid

ILLINOIS DEPARTMENT OF TRANSPORTATION

OPTION FOR BITUMINOUS MATERIALS COST ADJUSTMENTS

The bidder shall submit this completed form with his/her bid. Failure to submit the form, or failure to fill out the form completely, shall make this contract exempt of bituminous materials cost adjustments. After award, this form, when submitted, shall become part of the contract.

Contract No.: _____

Company Name: _____

Contractor's Option:

Is your company opting to include this special provision as part of the contract?

Yes ☐ No ☐

Signature: _____ **Date:** _____

80173

RETURN TO AGENDA

RECLAIMED ASPHALT PAVEMENT AND RECLAIMED ASPHALT SHINGLES (BDE)

Effective: November 1, 2012
Revise: April 1, 2016

Revise Section 1031 of the Standard Specifications to read:

"SECTION 1031. RECLAIMED ASPHALT PAVEMENT AND RECLAIMED ASPHALT SHINGLES

1031.01 Description. Reclaimed asphalt pavement and reclaimed asphalt shingles shall be according to the following.

(a) Reclaimed Asphalt Pavement (RAP). RAP is the material produced by cold milling or crushing an existing hot-mix asphalt (HMA) pavement. The Contractor shall supply written documentation that the RAP originated from routes or airfields under federal, state, or local agency jurisdiction.

(b) Reclaimed Asphalt Shingles (RAS). Reclaimed asphalt shingles (RAS). RAS is from the processing and grinding of preconsumer or post-consumer shingles. RAS shall be a clean and uniform material with a maximum of 0.5 percent unacceptable material, as defined in Bureau of Materials and Physical Research Policy Memorandum, "Reclaimed Asphalt Shingle (RAS) Sources", by weight of RAS. All RAS used shall come from a Bureau of Materials and Physical Research approved processing facility where it shall be ground and processed to 100 percent passing the 3/8 in. (9.5 mm) sieve and 93 percent passing the #4 (4.75 mm) sieve based on a dry shake gradation. RAS shall be uniform in gradation and asphalt binder content and shall meet the testing requirements specified herein. In addition, RAS shall meet the following Type 1 or Type 2 requirements.

(1) Type 1. Type 1 RAS shall be processed, preconsumer asphalt shingles salvaged from the manufacture of residential asphalt roofing shingles.

(2) Type 2. Type 2 RAS shall be processed post-consumer shingles only, salvaged from residential, or four unit or less dwellings not subject to the National Emission Standards for Hazardous Air Pollutants (NESHAP).

1031.02 Stockpiles. RAP and RAS stockpiles shall be according to the following.

(a) RAP Stockpiles. The Contractor shall construct individual, sealed RAP stockpiles meeting one of the following definitions. No additional RAP shall be added to the pile after the pile has been sealed. Stockpiles shall be sufficiently separated to prevent intermingling at the base. Stockpiles shall be identified by signs indicating the type as listed below (i.e. "Homogeneous Surface").

RETURN TO AGENDA

Prior to milling, the Contractor shall request the District provide documentation on the quality of the RAP to clarify the appropriate stockpile.

(1) Fractionated RAP (FRAP). FRAP shall consist of RAP from Class I, HMA (High and Low ESAL) mixtures. The coarse aggregate in FRAP shall be crushed aggregate and may represent more than one aggregate type and/or quality, but shall be at least C quality. All FRAP shall be fractionated prior to testing by screening into a minimum of two size fractions with the separation occurring on or between the #4 (4.75 mm) and 1/2 in. (12.5 mm) sieves. Agglomerations shall be minimized such that 100 percent of the RAP shall pass the sieve size specified below for the mix into which the FRAP will be incorporated.

Mixture FRAP will be used in:	Sieve Size that 100 % of FRAP Shall Pass
IL-19.0	1 1/2 in. (40 mm)
IL-9.5	3/4 in. (20 mm)
IL-4.75	1/2 in. (13 mm)

(2) Homogeneous. Homogeneous RAP stockpiles shall consist of RAP from Class I, HMA (High and Low ESAL) mixtures and represent: 1) the same aggregate quality, but shall be at least C quality; 2) the same type of crushed aggregate (either crushed natural aggregate, ACBF slag, or steel slag); 3) similar gradation; and 4) similar asphalt binder content. If approved by the Engineer, combined single pass surface/binder millings may be considered "homogeneous" with a quality rating dictated by the lowest coarse aggregate quality present in the mixture.

(3) Conglomerate. Conglomerate RAP stockpiles shall consist of RAP from Class I, HMA (High and Low ESAL) mixtures. The coarse aggregate in this RAP shall be crushed aggregate and may represent more than one aggregate type and/or quality, but shall be at least C quality. This RAP may have an inconsistent gradation and/or asphalt binder content prior to processing. All conglomerate RAP shall be processed prior to testing by crushing to where all RAP shall pass the 5/8 in. (16 mm) or smaller screen. Conglomerate RAP stockpiles shall not contain steel slag.

(4) Non-Quality. RAP stockpiles that do not meet the requirements of the stockpile categories listed above shall be classified as "Non-Quality".

RAP/FRAP containing contaminants, such as earth, brick, sand, concrete, sheet asphalt, bituminous surface treatment (i.e. chip seal), pavement fabric, joint sealants, etc., will be unacceptable unless the contaminants are removed to the satisfaction of the Engineer. Sheet asphalt shall be stockpiled separately.

(b) RAS Stockpiles. Type 1 and Type 2 RAS shall be stockpiled separately and shall not be intermingled. Each stockpile shall be signed indicating what type of RAS is present.

RETURN TO AGENDA

Unless otherwise specified by the Engineer, mechanically blending manufactured sand (FM 20 or FM 22) up to an equal weight of RAS with the processed RAS will be permitted to improve workability. The sand shall be "B Quality" or better from an approved Aggregate Gradation Control System source. The sand shall be accounted for in the mix design and during HMA production.

Records identifying the shingle processing facility supplying the RAS, RAS type, and lot number shall be maintained by project contract number and kept for a minimum of three years.

1031.03 Testing. RAP/FRAP and RAS testing shall be according to the following.

(a) RAP/FRAP Testing. When used in HMA, the RAP/FRAP shall be sampled and tested either during or after stockpiling.

(1) During Stockpiling. For testing during stockpiling, washed extraction samples shall be run at the minimum frequency of one sample per 500 tons (450 metric tons) for the first 2000 tons (1800 metric tons) and one sample per 2000 tons (1800 metric tons) thereafter. A minimum of five tests shall be required for stockpiles less than 4000 tons (3600 metric tons).

(2) After Stockpiling. For testing after stockpiling, the Contractor shall submit a plan for approval to the District proposing a satisfactory method of sampling and testing the RAP/FRAP pile either in-situ or by restockpiling. The sampling plan shall meet the minimum frequency required above and detail the procedure used to obtain representative samples throughout the pile for testing.

Each sample shall be split to obtain two equal samples of test sample size. One of the two test samples from the final split shall be labeled and stored for Department use. The Contractor shall extract the other test sample according to Department procedure. The Engineer reserves the right to test any sample (split or Department-taken) to verify Contractor test results.

(b) RAS Testing. RAS or RAS blended with manufactured sand shall be sampled and tested during stockpiling according to Bureau of Materials and Physical Research Policy Memorandum, "Reclaimed Asphalt Shingle (RAS) Source".

Samples shall be collected during stockpiling at the minimum frequency of one sample per 200 tons (180 metric tons) for the first 1000 tons (900 metric tons) and one sample per 250 tons (225 metric tons) thereafter. A minimum of five samples are required for stockpiles less than 1000 tons (900 metric tons). Once a ≤ 1000 ton (900 metric ton), five-sample/test stockpile has been established it shall be sealed. Additional incoming RAS or RAS blended with manufactured sand shall be stockpiled in a separate working pile as designated in the Quality Control plan and only added to the sealed stockpile when the test results of the working pile are complete and are found to meet the tolerances specified herein for the original sealed RAS stockpile.

RETURN TO AGENDA

Before testing, each sample shall be split to obtain two test samples. One of the two test samples from the final split shall be labeled and stored for Department use. The Contractor shall perform a washed extraction and test for unacceptable materials on the other test sample according to Department procedures. The Engineer reserves the right to test any sample (split or Department-taken) to verify Contractor test results.

If the sampling and testing was performed at the shingle processing facility in accordance with the QC Plan, the Contractor shall obtain and make available all of the test results from start of the initial stockpile.

1031.04 Evaluation of Tests. Evaluation of test results shall be according to the following.

(a) Evaluation of RAP/FRAP Test Results. All of the extraction results shall be compiled and averaged for asphalt binder content and gradation, and when applicable G_{mm}. Individual extraction test results, when compared to the averages, will be accepted if within the tolerances listed below.

Parameter	FRAP/Homogeneous/ Conglomerate
1 in. (25 mm)	
1/2 in. (12.5 mm)	± 8 %
No. 4 (4.75 mm)	± 6 %
No. 8 (2.36 mm)	± 5 %
No. 16 (1.18 mm)	
No. 30 (600 µm)	± 5 %
No. 200 (75 µm)	± 2.0 %
Asphalt Binder	± 0.4 % 1/
G_{mm}	± 0.03

1/ The tolerance for FRAP shall be ± 0.3 %.

If more than 20 percent of the individual sieves and/or asphalt binder content tests are out of the above tolerances, the RAP/FRAP shall not be used in HMA unless the RAP/FRAP representing the failing tests is removed from the stockpile. All test data and acceptance ranges shall be sent to the District for evaluation.

With the approval of the Engineer, the ignition oven may be substituted for extractions according to the ITP, "Calibration of the Ignition Oven for the Purpose of Characterizing Reclaimed Asphalt Pavement (RAP)".

(b) Evaluation of RAS and RAS Blended with Manufactured Sand Test Results. All of the test results, with the exception of percent unacceptable materials, shall be compiled and averaged for asphalt binder content and gradation. Individual test results, when compared to the averages, will be accepted if within the tolerances listed below.

RETURN TO AGENDA

Parameter	RAS
No. 8 (2.36 mm)	± 5 %
No. 16 (1.18 mm)	± 5 %
No. 30 (600 µm)	± 4 %
No. 200 (75 µm)	± 2.0 %
Asphalt Binder Content	± 1.5 %

If more than 20 percent of the individual sieves and/or asphalt binder content tests are out of the above tolerances, or if the percent unacceptable material exceeds 0.5 percent by weight of material retained on the # 4 (4.75 mm) sieve, the RAS or RAS blend shall not be used in Department projects. All test data and acceptance ranges shall be sent to the District for evaluation.

1031.05 Quality Designation of Aggregate in RAP/FRAP.

(a) RAP. The aggregate quality of the RAP for homogeneous and conglomerate stockpiles shall be set by the lowest quality of coarse aggregate in the RAP stockpile and are designated as follows.

(1) RAP from Class I, Superpave/HMA (High ESAL), or (Low ESAL) IL-9.5L surface mixtures are designated as containing Class B quality coarse aggregate.

(2) RAP from Class I binder, Superpave/HMA (High ESAL) binder, or (Low ESAL) IL-19.0L binder mixtures are designated as containing Class C quality coarse aggregate.

(b) FRAP. If the Engineer has documentation of the quality of the FRAP aggregate, the Contractor shall use the assigned quality provided by the Engineer.

If the quality is not known, the quality shall be determined as follows. Coarse and fine FRAP stockpiles containing plus #4 (4.75 mm) sieve coarse aggregate shall have a maximum tonnage of 5000 tons (4500 metric tons). The Contractor shall obtain a representative sample witnessed by the Engineer. The sample shall be a minimum of 50 lb (25 kg). The sample shall be extracted according to Illinois Modified AASHTO T 164 by a consultant laboratory prequalified by the Department for the specified testing. The consultant laboratory shall submit the test results along with the recovered aggregate to the District Office. The cost for this testing shall be paid by the Contractor. The District will forward the sample to the Bureau of Materials and Physical Research Aggregate Lab for MicroDeval Testing, according to ITP 327. A maximum loss of 15.0 percent will be applied for all HMA applications.

1031.06 Use of RAP/FRAP and/or RAS in HMA. The use of RAP/FRAP and/or RAS shall be the Contractor's option when constructing HMA in all contracts.

(a) RAP/FRAP. The use of RAP/FRAP in HMA shall be as follows.

RETURN TO AGENDA

(1) Coarse Aggregate Size. The coarse aggregate in all RAP shall be equal to or less than the nominal maximum size requirement for the HMA mixture to be produced.

(2) Steel Slag Stockpiles. Homogeneous RAP stockpiles containing steel slag will be approved for use in all HMA (High ESAL and Low ESAL) Surface and Binder Mixture applications.

(3) Use in HMA Surface Mixtures (High and Low ESAL). RAP/FRAP stockpiles for use in HMA surface mixtures (High and Low ESAL) shall be FRAP or homogeneous in which the coarse aggregate is Class B quality or better. RAP/FRAP from Conglomerate stockpiles shall be considered equivalent to limestone for frictional considerations. Known frictional contributions from plus #4 (4.75 mm) homogeneous RAP and FRAP stockpiles will be accounted for in meeting frictional requirements in the specified mixture.

(4) Use in HMA Binder Mixtures (High and Low ESAL), HMA Base Course, and HMA Base Course Widening. RAP/FRAP stockpiles for use in HMA binder mixtures (High and Low ESAL), HMA base course, and HMA base course widening shall be FRAP, homogeneous, or conglomerate, in which the coarse aggregate is Class C quality or better.

(5) Use in Shoulders and Subbase. RAP/FRAP stockpiles for use in HMA shoulders and stabilized subbase (HMA) shall be FRAP, homogeneous, or conglomerate.

(6) When the Contractor chooses the RAP option, the percentage of RAP shall not exceed the amounts indicated in Article 1031.06(c)(1) below for a given Ndesign.

(b) RAS. RAS meeting Type 1 or Type 2 requirements will be permitted in all HMA applications as specified herein.

(c) RAP/FRAP and/or RAS Usage Limits. Type 1 or Type 2 RAS may be used alone or in conjunction with RAP or FRAP in HMA mixtures up to a maximum of 5.0 percent by weight of the total mix.

(1) RAP/RAS. When RAP is used alone or RAP is used in conjunction with RAS, the percentage of virgin asphalt binder replacement shall not exceed the amounts listed in the Max RAP/RAS ABR table listed below for the given Ndesign.

RAP/RAS Maximum Asphalt Binder Replacement (ABR) Percentage

HMA Mixtures 1/, 2/	RAP/RAS Maximum ABR %		
Ndesign	Binder/Leveling Binder	Surface	Polymer Modified
30	30	30	10

RETURN TO AGENDA

50	25	15	10
70	15	10	10
90	10	10	10

1/ For Low ESAL HMA shoulder and stabilized subbase, the RAP/RAS ABR shall not exceed 50 percent of the mixture.

2/ When RAP/RAS ABR exceeds 20 percent, the high and low virgin asphalt binder grades shall each be reduced by one grade (i.e. 25 percent ABR would require a virgin asphalt binder grade of PG 64-22 to be reduced to a PG 58-28). If warm mix asphalt (WMA) technology is utilized and production temperatures do not exceed 275 °F (135 °C), the high and low virgin asphalt binder grades shall each be reduced by one grade when RAP/RAS ABR exceeds 25 percent (i.e. 26 percent RAP/RAS ABR would require a virgin asphalt binder grade of PG 64-22 to be reduced to a PG 58-28).

(2) FRAP/RAS. When FRAP is used alone or FRAP is used in conjunction with RAS, the percentage of virgin asphalt binder replacement shall not exceed the amounts listed in the FRAP/RAS table listed below for the given Ndesign.

FRAP/RAS Maximum Asphalt Binder Replacement (ABR) Percentage

HMA Mixtures 1/, 2/	FRAP/RAS Maximum ABR %		
Ndesign	Binder/Leveling Binder	Surface	Polymer Modified 3/, 4/
30	50	40	10
50	40	35	10
70	40	30	10
90	40	30	10

1/ For Low ESAL HMA shoulder and stabilized subbase, the FRAP/RAS ABR shall not exceed 50 percent of the mixture.

2/ When FRAP/RAS ABR exceeds 20 percent for all mixes, the high and low virgin asphalt binder grades shall each be reduced by one grade (i.e. 25 percent ABR would require a virgin asphalt binder grade of PG 64-22 to be reduced to a PG 58-28). If warm mix asphalt (WMA) technology is utilized and production temperatures do not exceed 275 °F (135 °C), the high and low virgin asphalt binder grades shall each be reduced by one grade when FRAP/RAS ABR exceeds 25 percent (i.e. 26 percent ABR would require a virgin asphalt binder grade of PG 64-22 to be reduced to a PG 58-28).

3/ For SMA the FRAP/RAS ABR shall not exceed 20 percent.

RETURN TO AGENDA

4/ For IL-4.75 mix the FRAP/RAS ABR shall not exceed 30 percent.

1031.07 HMA Mix Designs. At the Contractor's option, HMA mixtures may be constructed utilizing RAP/FRAP and/or RAS material meeting the detailed requirements specified herein.

(a) RAP/FRAP and/or RAS. RAP/FRAP and/or RAS mix designs shall be submitted for verification. If additional RAP/FRAP and/or RAS stockpiles are tested and found that no more than 20 percent of the results, as defined under "Testing" herein, are outside of the control tolerances set for the original RAP/FRAP and/or RAS stockpile and HMA mix design, and meets all of the requirements herein, the additional RAP/FRAP and/or RAS stockpiles may be used in the original mix design at the percent previously verified.

(b) RAS. Type 1 and Type 2 RAS are not interchangeable in a mix design. A RAS stone bulk specific gravity (Gsb) of 2.300 shall be used for mix design purposes.

1031.08 HMA Production. HMA production utilizing RAP/FRAP and/or RAS shall be as follows.

(a) RAP/FRAP. The coarse aggregate in all RAP/FRAP used shall be equal to or less than the nominal maximum size requirement for the HMA mixture being produced.

To remove or reduce agglomerated material, a scalping screen, gator, crushing unit, or comparable sizing device approved by the Engineer shall be used in the RAP feed system to remove or reduce oversized material. If material passing the sizing device adversely affects the mix production or quality of the mix, the sizing device shall be set at a size specified by the Engineer.

If the RAP/FRAP control tolerances or QC/QA test results require corrective action, the Contractor shall cease production of the mixture containing RAP/FRAP and either switch to the virgin aggregate design or submit a new RAP/FRAP design.

(b) RAS. RAS shall be incorporated into the HMA mixture either by a separate weight depletion system or by using the RAP weigh belt. Either feed system shall be interlocked with the aggregate feed or weigh system to maintain correct proportions for all rates of production and batch sizes. The portion of RAS shall be controlled accurately to within ± 0.5 percent of the amount of RAS utilized. When using the weight depletion system, flow indicators or sensing devices shall be provided and interlocked with the plant controls such that the mixture production is halted when RAS flow is interrupted.

(c) RAP/FRAP and/or RAS. HMA plants utilizing RAP/FRAP and/or RAS shall be capable of automatically recording and printing the following information.

(1) Dryer Drum Plants.

a. Date, month, year, and time to the nearest minute for each print.

RETURN TO AGENDA

b. HMA mix number assigned by the Department.

c. Accumulated weight of dry aggregate (combined or individual) in tons (metric tons) to the nearest 0.1 ton (0.1 metric ton).

d. Accumulated dry weight of RAP/FRAP/RAS in tons (metric tons) to the nearest 0.1 ton (0.1 metric ton).

e. Accumulated mineral filler in revolutions, tons (metric tons), etc. to the nearest 0.1 unit.

f. Accumulated asphalt binder in gallons (liters), tons (metric tons), etc. to the nearest 0.1 unit.

g. Residual asphalt binder in the RAP/FRAP material as a percent of the total mix to the nearest 0.1 percent.

h. Aggregate and RAP/FRAP moisture compensators in percent as set on the control panel. (Required when accumulated or individual aggregate and RAP/FRAP are printed in wet condition.)

(2) Batch Plants.

a. Date, month, year, and time to the nearest minute for each print.

b. HMA mix number assigned by the Department.

c. Individual virgin aggregate hot bin batch weights to the nearest pound (kilogram).

d. Mineral filler weight to the nearest pound (kilogram).

e. RAP/FRAP/RAS weight to the nearest pound (kilogram).

f. Virgin asphalt binder weight to the nearest pound (kilogram).

g. Residual asphalt binder in the RAP/FRAP/RAS material as a percent of the total mix to the nearest 0.1 percent.

The printouts shall be maintained in a file at the plant for a minimum of one year or as directed by the Engineer and shall be made available upon request. The printing system will be inspected by the Engineer prior to production and verified at the beginning of each construction season thereafter.

RETURN TO AGENDA

1031.09 RAP in Aggregate Surface Course and Aggregate Wedge Shoulders, Type B. The use of RAP in aggregate surface course (temporary access entrances only) and aggregate wedge shoulders, Type B shall be as follows.

(a) Stockpiles and Testing. RAP stockpiles may be any of those listed in Article 1031.02, except "Non-Quality" and "FRAP". The testing requirements of Article 1031.03 shall not apply. RAP used shall be according to the current Bureau of Materials and Physical Research Policy Memorandum, "Reclaimed Asphalt Pavement (RAP) for Aggregate Applications".

(b) Gradation. One hundred percent of the RAP material shall pass the 1 1/2 in. (37.5 mm) sieve. The RAP material shall be reasonably well graded from coarse to fine. RAP material that is gap-graded or single sized will not be accepted."

80306

RETURN TO AGENDA

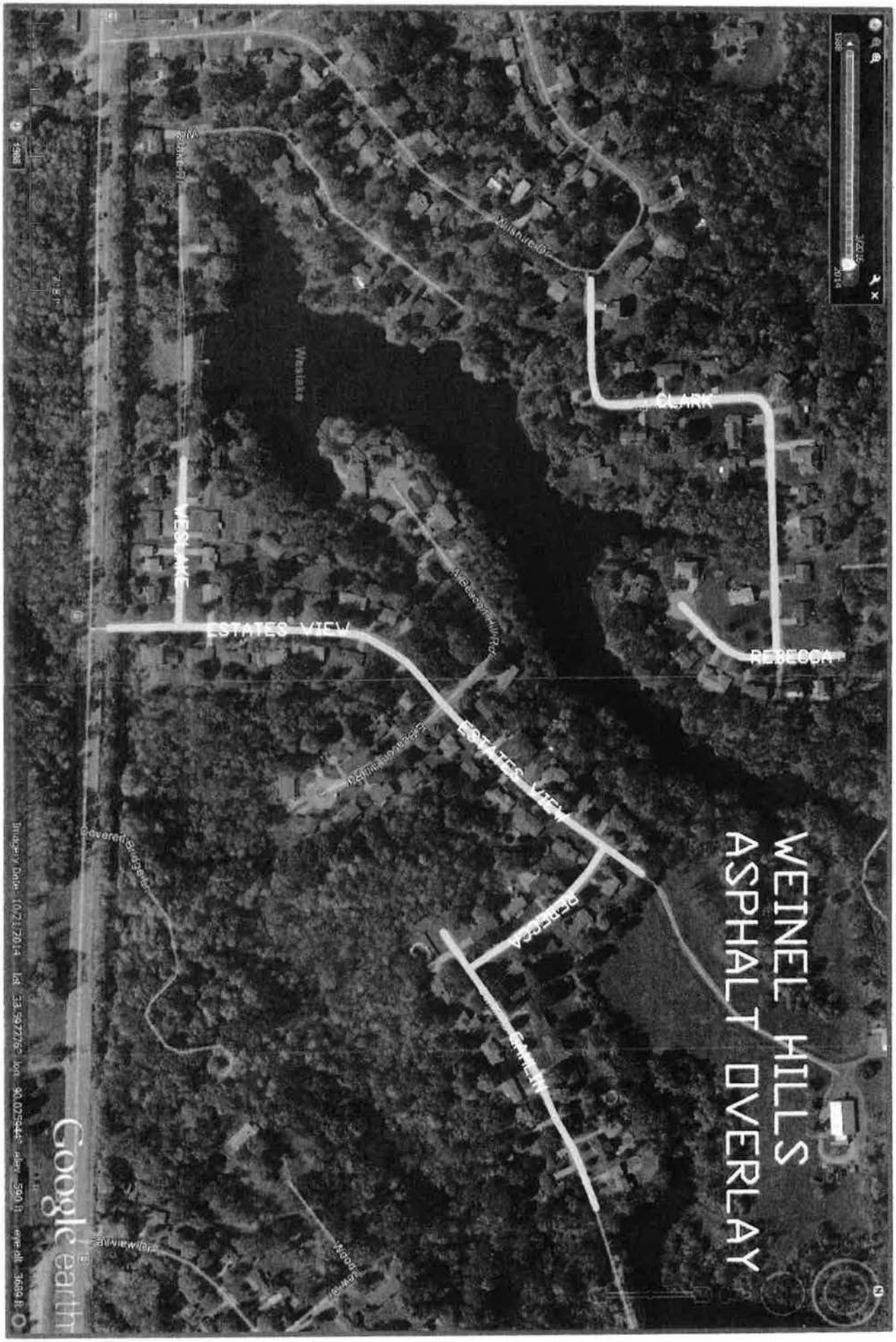

PROPOSED RESOLUTION NO. 36-'16

RETURN TO AGENDA

A RESOLUTION AUTHORIZING THE MAYOR TO ENTER INTO A CONTRACT ON BEHALF OF THE CITY OF FAIRVIEW HEIGHTS WITH HAIER PLUMBING & HEATING, INC. FOR STORMWATER IMPROVEMENTS IN THE FOX CREEK SUBDIVISION.

WHEREAS, the City has advertised for bids for labor, materials, and equipment in connection with the installation of storm sewer from 36-inch to 48-inch diameter with five storm sewer related structures and the construction of a detention basin control structure in the Fox Creek Subdivision; and

WHEREAS, Haier Plumbing & Heating, Inc. has submitted the lowest and best bid in the interest of the City pursuant to such advertisement for bid.

NOW, THEREFORE, BE IT RESOLVED BY THE CITY COUNCIL OF THE CITY OF FAIRVIEW HEIGHTS:

That the Mayor be and is hereby authorized to enter into, on behalf of the City, a contract with Haier Plumbing & Heating, Inc., 301 North Elkton Street, P.O. Box 400, Okawville, Illinois 62271 for the installation of storm sewer from 36-inch to 48-inch diameter with five storm sewer related structures and the construction of a detention basin control structure in the Fox Creek Subdivision for ONE HUNDRED ELEVEN THOUSAND THREE HUNDRED EIGHTY DOLLARS AND FORTY CENTS ($111,380.40) for said project pursuant to bid documents attached hereto, and marked "Exhibit A."

This Resolution shall be in full force and effect from and after its passage and approval as provided by law.

PASSED:

APPROVED:

MARK T. KUPSKY - MAYOR
CITY OF FAIRVIEW HEIGHTS

ATTEST:

KAREN J. KAUFHOLD - CITY CLERK

"EXHIBIT A"

Illinois Department of Transportation

RETURN TO AGENDA

Local Public Agency Formal Contract

PROPOSAL SUBMITTED BY		
Haier Plumbing & Heating, Inc.		
Contractor's Name		
301 N. Elkton Street		400
Street		P.O. Box
Okawville	IL	62271
City	State	Zip Code

STATE OF ILLINOIS

COUNTY St. Clair

City of Fairview Heights, Illinois

(Name of City, Village, Town or Road District)

FOR THE IMPROVEMENT OF

STREET NAME OR ROUTE Fox Creek

SECTION NO. N/A

TYPES OF FUNDS Home Rule

☒ SPECIFICATIONS (required) ☒ PLANS (required) ☒ CONTRACT BOND (when required)

For Municipal Projects

Submitted/Approved/Passed

☒ Mayor ☐ President of Board of Trustees ☐ Municipal Official

Date

Department of Transportation

☐ Concurrence in approval of award

Regional Engineer

Date

For County and Road District Projects

Submitted/Approved

Highway Commissioner

Date

Submitted/Approved

County Engineer/Superintendent of Highways

Date

RETURN TO AGENDA

County St. Clair
Local Public Agency Fairview Heights
Section Number N/A
Route Fox Creek

1. THIS AGREEMENT, made and concluded the _____ day of _____ (Month and Year),

between the City of Fairview Heights

acting by and through its City Council known as the party of the first part, and

Haier Plumbing & Heating, Inc. his/their executors, administrators, successors or assigns,

known as the party of the second part.

2. Witnesseth: That for and in consideration of the payments and agreements mentioned in the Proposal hereto attached, to be made and performed by the party of the first part, and according to the terms expressed in the Bond referring to these presents, the party of the second part agrees with said party of the first part at his/their own proper cost and expense to do all the work, furnish all materials and all labor necessary to complete the work in accordance with the plans and specifications hereinafter described, and in full compliance with all of the terms of this agreement and the requirements of the Engineer under it.

3. And it is also understood and agreed that the LPA Formal Contract Proposal, Special Provisions, Affidavit of Illinois Business Office, Apprenticeship or Training Program Certification, and Contract Bond hereto attached, and the Plans for Fox Creek Storm Water, in City of Fairview Heights,

approved by the Illinois Department of Transportation and the City of Fairview Heights on N/A (Date), are essential documents of this

contract and are a part hereof.

4. IN WITNESS WHEREOF, The said parties have executed these presents on the date above mentioned.

Attest: Karen J. Kaufhold

_____ Clerk

(Seal)

The Mayor of Fairview Heights

By _____
Party of the First Part

(If a Corporation)

Corporate Name _____

By _____
President Party of the Second Part

(If a Co-Partnership)

Attest:

_____
Secretary

_____

Partners doing Business under the firm name of

_____
Party of the Second Part

(If an individual)

_____
Party of the Second Part

RETURN TO AGENDA

Illinois Department of Transportation

RETURN TO AGENDA

Contract Bond

Route Fox Creek
County St. Clair
Local Agency Fairview Heights
Section N/A

We , _____

_____

a/an) ☐ Individual ☐ Co-partnership ☐ Corporation organized under the laws of the State of _____ ,

as PRINCIPAL, and _____

_____ as SURETY,

are held and firmly bound unto the above Local Agency (hereafter referred to as "LA") in the penal sum of

_____

_____ Dollars (_____), lawful money of the United States, well and truly to be paid unto said LA, for the payment of which we bind ourselves, our heirs, executors, administrators, successors, jointly to pay to the LA this sum under the conditions of this instrument.

WHEREAS THE CONDITION OF THE FOREGOING OBLIGATION IS SUCH that, the said Principal has entered into a written contract with the LA acting through its awarding authority for the construction of work on the above section, which contract is hereby referred to and made a part hereof, as if written herein at length, and whereby the said Principal has promised and agreed to perform said work in accordance with the terms of said contract, and has promised to pay all sums of money due for any labor, materials, apparatus, fixtures or machinery furnished to such Principal for the purpose of performing such work and has further agreed to pay all direct and indirect damages to any person, firm, company or corporation suffered or sustained on account of the performance of such work during the time thereof and until such work is completed and accepted; and has further agreed that this bond shall inure to the benefit of any person, firm, company or corporation to whom any money may be due from the Principal, subcontractor or otherwise for any such labor, materials, apparatus, fixtures or machinery so furnished and that suit may be maintained on such bond by any such person, firm, company or corporation for the recovery of any such money.

NOW THEREFORE, if the said Principal shall well and truly perform said work in accordance with the terms of said contract, and shall pay all sums of money due or to become due for any labor, materials, apparatus, fixtures or machinery furnished to him for the purpose of constructing such work, and shall commence and complete the work within the time prescribed in said contract, and shall pay and discharge all damages, direct and indirect, that may be suffered or sustained on account of such work during the time of the performance thereof and until the said work shall have been accepted, and shall hold the LA and its awarding authority harmless on account of any such damages and shall in all respects fully and faithfully comply with all the provisions, conditions and requirements of said contract, then this obligation to be void; otherwise to remain in full force and effect.

RETURN TO AGENDA

IN TESTIMONY WHEREOF, the said PRINCIPAL and the said SURETY have caused this instrument to be signed by their respective officers this _____ day of _____ A.D. _____

PRINCIPAL

_____ (Company Name)

By: _____ (Signature & Title)

Attest: _____ (Signature & Title)

_____ (Company Name)

By: _____ (Signature & Title)

Attest: _____ (Signature & Title)

(If PRINCIPAL is a joint venture of two or more contractors, the company names and authorized signature of each contractor must be affixed.)

STATE OF ILLINOIS,

COUNTY OF _____

I, _____, a Notary Public in and for said county, do hereby certify that

_____

_____

(Insert names of individuals signing on behalf or PRINCIPAL)

who are each personally known to me to be the same persons whose names are subscribed to the foregoing instrument on behalf of PRINCIPAL, appeared before me this day in person and acknowledged respectively, that they signed and delivered said instrument as their free and voluntary act for the uses and purposes therein set forth.

Given under my hand and notarial seal this _____ day of _____ A.D. _____

My commission expires _____ _____ Notary Public **(SEAL)**

SURETY

_____ (Name of Surety)

By: _____ (Signature of Attorney-in-Fact)

STATE OF ILLINOIS. **(SEAL)**

COUNTY OF _____

I, _____, a Notary Public in and for said county, do hereby certify that

_____

_____

(Insert names of individuals signing on behalf or SURETY)

who are each personally known to me to be the same persons whose names are subscribed to the foregoing instrument on behalf of SURETY, appeared before me this day in person and acknowledged respectively, that they signed and delivered said instrument as their free and voluntary act for the uses and purposes therein set forth.

Given under my hand and notarial seal this _____ day of _____ A.D. _____

My commission expires _____ _____ Notary Public **(SEAL)**

Approved this _____ day of _____, A.D. _____

Attest:

_____ _____ (Awarding Authority)

_____ Clerk _____ (Chairman/Mayor/President)

RETURN TO AGENDA

Illinois Department of Transportation

Local Public Agency Formal Contract Proposal

PROPOSAL SUBMITTED BY		
Haier Plumbing & Heating, Inc.		
Contractor's Name		
301 N. Elkton St., P.O. Box 400		
Street	P.O. Box	
O'Kawville	IL	62271
City	State	Zip Code

STATE OF ILLINOIS

COUNTY OF ST. CLAIR

CITY OF FAIRVIEW HEIGHTS
(Name of City, Village, Town or Road District)

FOR THE IMPROVEMENT OF

STREET NAME OR ROUTE NO. FOX CREEK

SECTION NO. N/A

TYPES OF FUNDS CITY

☒ SPECIFICATIONS (required) ☒ PLANS (required)

For Municipal Projects

Submitted/Approved/Passed

☐ Mayor ☐ President of Board of Trustees ☒ Municipal Official

2-19-2016
Date

Department of Transportation

☐ Released for bid based on limited review

Regional Engineer

Date

For County and Road District Projects

Submitted/Approved

Highway Commissioner

Date

Submitted/Approved

County Engineer/Superintendent of Highways

Date

Note: All proposal documents, including Proposal Guaranty Checks or Proposal Bid Bonds, should be stapled together to prevent loss when bids are processed.

RETURN WITH BID

RETURN TO AGENDA

County ST. CLAIR
Local Public Agency FAIRVIEW HEIGHTS
Section Number N/A
Route FOX CREEK

NOTICE TO BIDDERS

Sealed proposals for the improvement described below will be received at the office of the City Clerk,
City of Fairview Heights-10025 Bunkum Road, Fairview Heights, IL 62208 (Address) until 2:00 PM (Time) on March 8, 2016 (Date)

Sealed proposals will be opened and read publicly at the office of Public Works
City of Fairview Heights-10025 Bunkum Road, Fairview Heights, IL 62208 (Address) at 2:00 PM (Time) on March 8, 2016 (Date)

DESCRIPTION OF WORK

Name Fox Creek Subdivision Storm Water Improvements Length: 639.00 feet (0.12 miles)
Location Fox Creek Subdivision-Fairview Heights, IL
Proposed Improvement Installation of storm sewer from 36" to 48" diameter with five storm sewer related structures and the construction of a detention basin control structure.

1. Plans and proposal forms will be available in the office of the City Clerk
City of Fairview Heights-10025 Bunkum Road, Fairview Heights, IL 62208 (Address)

2. ☒ Prequalification
If checked, the 2 low bidders must file within 24 hours after the letting an "Affidavit of Availability" (Form BC 57), in duplicate, showing all uncompleted contracts awarded to them and all low bids pending award for Federal, State, County, Municipal and private work. One original shall be filed with the Awarding Authority and one original with the IDOT District Office.

3. The Awarding Authority reserves the right to waive technicalities and to reject any or all proposals as provided in BLRS Special Provision for Bidding Requirements and Conditions for Contract Proposals.

4. The following BLR Forms shall be returned by the bidder to the Awarding Authority:
   a. BLR 12200: Local Public Agency Formal Contract Proposal
   b. BLR 12200a Schedule of Prices
   c. BLR 12230: Proposal Bid Bond (if applicable)
   d. BLR 12325: Apprenticeship or Training Program Certification (**do not use for federally funded projects**)
   e. BLR 12326: Affidavit of Illinois Business Office
   f. Project Labor Agreement

5. The quantities appearing in the bid schedule are approximate and are prepared for the comparison of bids. Payment to the Contractor will be made only for the actual quantities of work performed and accepted or materials furnished according to the contract. The scheduled quantities of work to be done and materials to be furnished may be increased, decreased or omitted as hereinafter provided.

6. Submission of a bid shall be conclusive assurance and warranty the bidder has examined the plans and understands all requirements for the performance of work. The bidder will be responsible for all errors in the proposal resulting from failure or neglect to conduct an in depth examination. The Awarding Authority will, in no case be responsible for any costs, expenses, losses or changes in anticipated profits resulting from such failure or neglect of the bidder.

7. The bidder shall take no advantage of any error or omission in the proposal and advertised contract.

8. If a special envelope is supplied by the Awarding Authority, each proposal should be submitted in that envelope furnished by the Awarding Agency and the blank spaces on the envelope shall be filled in correctly to clearly indicate its contents. When an envelope other than the special one furnished by the Awarding Authority is used, it shall be marked to clearly indicate its contents. When sent by mail, the sealed proposal shall be addressed to the Awarding Authority at the address and in care of the official in whose office the bids are to be received. All proposals shall be filed prior to the time and at the place specified in the Notice to Bidders. Proposals received after the time specified will be returned to the bidder unopened.

9. Permission will be given to a bidder to withdraw a proposal if the bidder makes the request in writing or in person before the time for opening proposals.

RETURN WITH BID

RETURN TO AGENDA

County ST. CLAIR
Local Public Agency FAIRVIEW HEIGHTS
Section Number N/A
Route FOX CREEK

PROPOSAL

1. Proposal of Haier Plumbing & Heating, Inc.

for the improvement of the above section by the construction of Fox Creek Storm Sewer Improvements

a total distance of 639.00 feet, of which a distance of 639.00 feet, (0.120 miles) are to be improved.

2. The plans for the proposed work are those prepared by Horner and Shifrin, Inc.
and approved by the Department of Transportation on _____

3. The specifications referred to herein are those prepared by the Department of Transportation and designated as "Standard Specifications for Road and Bridge Construction" and the "Supplemental Specifications and Recurring Special Provisions" thereto, adopted and in effect on the date of invitation for bids.

4. The undersigned agrees to accept, as part of the contract, the applicable Special Provisions indicated on the "Check Sheet for Recurring Special Provisions" contained in this proposal.

5. The undersigned agrees to complete the work within 45 working days or by _____ unless additional time is granted in accordance with the specifications.

6. A proposal guaranty in the proper amount, as specified in BLRS Special Provision for Bidding Requirements and Conditions for Contract Proposals, will be required. Bid Bonds will be allowed as a proposal guaranty. Accompanying this proposal is either a bid bond if allowed, on Department form BLR 12230 or a proposal guaranty check, complying with the specifications, made payable to:

_____ Treasurer of _____

The amount of the check is _____ (_____).

7. In the event that one proposal guaranty check is intended to cover two or more proposals, the amount must be equal to the sum of the proposal guaranties, which would be required for each individual proposal. If the proposal guaranty check is placed in another proposal, it will be found in the proposal for: Section Number _____.

8. The successful bidder at the time of execution of the contract will be required to deposit a contract bond for the full amount of the award. When a contract bond is not required, the proposal guaranty check will be held in lieu thereof. If this proposal is accepted and the undersigned fails to execute a contract and contract bond as required, it is hereby agreed that the Bid Bond or check shall be forfeited to the Awarding Authority.

9. Each pay item should have a unit price and a total price. If no total price is shown or if there is a discrepancy between the product of the unit price multiplied by the quantity, the unit price shall govern. If a unit price is omitted, the total price will be divided by the quantity in order to establish a unit price.

10. A bid will be declared unacceptable if neither a unit price nor a total price is shown.

11. The undersigned submits herewith the schedule of prices on BLR 12200a covering the work to be performed under this contract.

12. The undersigned further agrees that if awarded the contract for the sections contained in the combinations on BLR 12200a, the work shall be in accordance with the requirements of each individual proposal for the multiple bid specified in the Schedule for Multiple Bids below.

BID FORM

PROJECT IDENTIFICATION: Fairview Heights, IL Fox Creek Subdivision Storm Water Improvements Project

THIS BID IS SUBMITTED TO: City of Fairview Heights
10025 Bunkum Road
Fairview Heights, IL 62208

RETURN TO AGENDA

1. The undersigned Bidder proposes and agrees, if this Bid is accepted, to enter into an agreement with Owner in the form included in these Contract Documents to perform and furnish all Work as specified or indicated in the Contract Documents for the Bid Price and within the Contract Times indicated in this Bid and in accordance with the other terms and conditions of the Contract Documents.

2. Bidder accepts all of the terms and conditions of the Contract Documents, including without limitation those dealing with the disposition of Bid security. This Bid will remain subject to acceptance for sixty days after the day of Bid opening, or for such longer period of time that Bidder may agree to in writing upon request of Owner. Bidder will sign and deliver the required number of counterparts of the Agreement with the Bonds and other documents required by the Bidding Requirements within fifteen days after the date of Owner's Notice of Award.

3. In submitting this Bid, Bidder represents, as more fully set forth in the Agreement, that:

   (a) Bidder has examined and carefully studied the Bidding Documents and the following Addenda receipt of all which is hereby acknowledged: (List Addenda by Addendum Number and Date)

Addendum No.	Date
#1 dated 3/3/2016	

   (b) Bidder has visited the site and become familiar with and is satisfied as to the general, local and site conditions that may affect cost, progress, performance and furnishing of the Work;

   (c) Bidder is familiar with and is satisfied as to all federal, state and local Laws and Regulations that may affect cost, progress, performance and furnishing of the Work.

   (d) Bidder has carefully studied all reports of explorations and tests of subsurface conditions at or contiguous to the site and all drawings of physical conditions in or relating to existing surface or subsurface structures at or contiguous to the site (except Underground Facilities) which have been identified in the Contract Documents; and reports and drawings of hazardous environmental conditions, if any, which have been identified in Contract Documents. Bidder acknowledges that such reports and drawings are not Contract Documents and may not be complete for Bidder's purposes. Bidder acknowledges that Owner and Engineer do not assume responsibility for the accuracy or completeness of information and data shown or indicated in the Bidding Documents with respect to Underground

Facilities at or contiguous to the site. Bidder has obtained and carefully studied (or assumes responsibility for having done so) all such additional or supplementary examinations, investigations, explorations, tests, studies and data concerning conditions (surface, subsurface and Underground Facilities) at or contiguous to the site or otherwise which may affect cost progress, performance or furnishing of the Work or which relate to any aspect of the means, methods, techniques, sequences and procedures of construction to be employed by Bidder and safety precautions and programs incident thereto. Bidder does not consider that any additional examinations, investigations, explorations, tests, studies or data are necessary for the determination of this Bid for performance and furnishing of the Work in accordance with the times, price and other terms and conditions of the Contract Documents.

(e) Bidder has obtained and carefully studied (or assumes responsibility for having done so) all additional or supplementary examinations, investigations, explorations, tests, studies and data concerning conditions (surface, subsurface and Underground Facilities) at or contiguous to the Site which may affect cost, progress, or performance of the Work or which relate to any aspect of the means, methods, techniques, sequences, and procedures of construction to be employed by Bidder, including applying the specific means, methods, techniques, sequences, and procedures of construction expressly required by the Bidding Documents to be employed by Bidder, and safety precautions and programs incident thereto.

(f) Bidder does not consider that any further examinations, investigations, explorations, tests, studies, or data are necessary for the determination of this Bid for performance of the Work at the price(s) bid and within the times and accordance with the other terms and conditions of the Bidding Documents.

(g) Bidder is aware of the general nature of Work to be performed by Owner and others at the site that relates to Work for which this Bid is submitted as indicated in the Contract Documents.

(h) Bidder has correlated the information known to Bidder, information and observations obtained from visits to the site, reports and drawings identified in the Contract Documents and all additional examinations, investigations, explorations, tests, studies and data with the Contract Documents.

(i) Bidder has given Engineer written notice of all conflicts, errors, ambiguities or discrepancies that Bidder has discovered in the Contract Documents and the written resolution thereof by Engineer is acceptable to Bidder, and the Contract Documents were generally sufficient to indicate and convey understanding of all terms and conditions for performing and furnishing the Work for which this Bid is submitted.

(j) The Bidding Documents are generally sufficient to indicate and convey understanding of all terms and conditions for the performance of the Work for which this Bid is submitted.

(k) This Bid is genuine and not made in the interest of or on behalf of any undisclosed person, firm or corporation and is not submitted in conformity with any agreement or rules of any group, association, organization or corporation; Bidder has not directly or indirectly induced or solicited any other Bidder to submit a false or sham bid; Bidder has not solicited or induced any person, firm

or corporation to refrain from bidding; and Bidder has not sought by collusion to obtain for itself any advantage over any other Bidder or over Owner.

4. Required Base Bid quantities of the items listed below are set forth in the Specifications. If increases or decreases in these quantities occur, the Contract Price is to be adjusted by Change Order on the basis of the following:

Bidder agrees to perform all the work described in the specifications and shown on the plans for the following unit prices.

All Items shown below are the totals all work to be performed. The Contractor shall refer to the plans and specifications work to be performed. All work is Complete-In-Place

RETURN TO AGENDA

A. STORM SEWER IMPROVEMENTS

IDOT Item No.	Description	Unit	Estimated Quantity	Bid Unit Price	Bid Price
61141300	STORM SEWERS (SPECIAL), 36" *	FOOT	113	$ 88.40	$ 9,989.20
61141500	STORM SEWERS (SPECIAL), 42" *	FOOT	10	$ 66.10	$ 661.00
61141600	STORM SEWERS (SPECIAL), 48" *	FOOT	516	$ 86.20	$ 44,479.20
54215571	METAL END SECTIONS 36" *	EACH	1	$ 430.00	$ 430.00
54215583	METAL END SECTIONS 48" *	EACH	1	$ 900.00	$ 900.00
550A0470	STORM SEWERS, CLASS A, TYPE 2 42" *	FOOT	33	$ 155.80	$ 5,141.40
60223800	MANHOLES, TYPE A, 6'-DIA, TYPE 1 FRAME, CLOSED LID	EACH	3	$ 2,560.00	$ 7,680.00
X6024240	INLETS, SPECIAL*	EACH	2	$ 2,390.00	$ 4,780.00
20800150	TRENCH BACKFILL*	CU YD	13	$ 45.00	$ 585.00
44201745	CLASS D PATCHES, TYPE III, 8 INCH *	SQ YD	23	$ 87.00	$ 2,001.00
44000500	COMBINATION CURB AND GUTTER REMOVAL	FOOT	25	$ 30.00	$ 750.00
X6061815	COMBINATION CONCRETE CURB AND GUTTER, TYPE M (SPECIAL) *	FOOT	25	$ 59.00	$ 1,475.00
44000600	SIDEWALK REMOVAL	SQ FT	100	$ 1.00	$ 100.00
42400100	PORTLAND CEMENT CONC. SIDEWALK 4 INCH	SQ FT	100	$ 6.55	$ 655.00
25000100	SEEDING, CLASS 1	ACRE	0.16	$ 16,000.00	$ 2,560.00
20101400	NITROGEN FERTILIZER NUTRIENT	POUND	15	$ 2.00	$ 30.00
20101500	PHOSPHORUS FERTILIZER NUTRIENT	POUND	15	$ 2.00	$ 30.00
20101600	POTASSIUM FERTILIZER NUTRIENT	POUND	15	$ 2.00	$ 30.00
20100110	TREE REMOVAL (OVER 15 UNITS DIAMETER)	UNIT	108	$ 40.00	$ 4,320.00
28100107	STONE RIPRAP, CLASS A4	SQ YD	6	$ 68.00	$ 408.00
28100109	STONE RIPRAP, CLASS A5	SQ YD	17	$ 70.00	$ 1,190.00
Z0013798	CONSTRUCTION LAYOUT*	LSUM	1	$ 3,500.00	$ 3,500.00
28000315	AGGREGATE DITCH CHECKS	TON	14	$ 61.50	$ 861.00
	STORM SEWER IMPROVEMENTS TOTAL				$92,555.80

* See Job Special Provisions

B. SOUTH BASIN OUTLET STRUCTURE

IDOT Item No.	Description	Unit	Estimated Quantity	Bid Unit Price	Bid Price
X6020182	DRAINAGE STRUCTURE SPECIAL*	LSUM	1	$ 9,645.00	$ 9,645.00
50105220	PIPE CULVERT REMOVAL	FOOT	52	$ 13.35	$ 694.20
61141100	STORM SEWERS (SPECIAL), 30" *	FOOT	52	$ 57.20	$ 2,974.40
28100109	STONE RIPRAP, CLASS A5	SQ YD	15	$ 83.00	$ 1,245.00
28200200	FILTER FABRIC	SQ YD	15	$ 2.00	$ 30.00
28000315	AGGREGATE DITCH CHECKS	TON	8	$ 92.00	$ 736.00
	SOUTH BASIN OUTLET STRUCTURE TOTAL				$15,324.60

* See Job Special Provisions

C. OVERALL PROJECT MOBILIZATION

IDOT Item No.	Description	Unit	Estimated Quantity	Bid Unit Price	Bid Price
67100100	MOBILIZATION	LSUM	1	$ 3,500.00	$ 3,500.00
	OVERALL PROJECT MOBILIZATION TOTAL				$

RETURN TO AGENDA

UNIT PRICE TOTAL BASE BID SUMMARY		SUBTOTAL BID AMOUNT
A.	Storm Sewer Improvements	$ 92,555.80
B.	South Basin Outlet Structure	$ 15,324.60
C.	Overall Project Mobilization	$ 3,500.00
TOTAL BASE BID SUMMARY =		$ 111,380.40

(figures)

$ One hundred eleven thousand, three hundred eighty and 40/xx dollars
(use words)

Bidder acknowledges that (1) each Bid Unit Price includes an amount considered by Bidder to be adequate to cover Contractor's overhead and profit for each separately identified item, and (2) estimated quantities are not guaranteed, and are solely for the purpose of comparison of Bids, and final payment for all unit price Bid items will be based on actual quantities, determined as provided in the Contract Documents.

Bidder acknowledges that quantities are not guaranteed and final payment will be based on actual quantities determined as defined by the Contract Documents.

5. Bidder agrees that the Work shall be substantially complete and ready for final payment on or before the dates or within the calendar days indicated in the Agreement; and that construction will be properly sequenced and coordinated, in conformance with all requirements of these Contract Documents.

   Bidder accepts the provisions of the Agreement as to liquidated damages in the event of failure to complete the Work within the times specified in the Agreement.

6. The following documents are attached to and made a condition of this Bid:

   (a) Required Bid Security, in the form and amount as prescribed by these Bid Documents.

   (b) Completed lists of Major Subcontractors, suppliers or other persons and organizations as required by these Bid Documents to be identified in this Bid.

   (c) Required Bidder's Qualification Statement, with supporting data as required by these Bid Documents.

7. Communications concerning this Bid shall be addressed to the address of Bidder indicated below.

8. Terms used in this Bid which are defined in the General Conditions or Instructions to Bidders shall have the meanings indicated in the General Conditions or Instructions to Bidders.

SUBMITTED on March 8, 2016

If Bidder is:

RETURN TO AGENDA

An Individual

By _____(SEAL)
(Individual's Name)

doing business as _____

Business address: _____

_____

Phone No.: _____

A Partnership

By _____(SEAL)
(Firm Name)

_____
(general partner)

Business address: _____

_____

Phone No.: _____

A Corporation

By Haier Plumbing & Heating, Inc. (SEAL)
(Corporation Name)

Nevada
(state of incorporation)

By James C Rossel (SEAL)
(name of person authorized to sign)

President
(Corporate Seal) (Title)

Attest _____
(Secretary)

Business address: 301 N. Elkton St., P.O. Box 400

Okawville IL 62271

Phone No.: 618.243.5908

Date of Qualification to do business is _____

RETURN TO AGENDA

A Joint Venture

By _____(SEAL)
(Name)

_____
(Address)

By _____(SEAL)
(Name)

_____
(Address)

Phone Number and Address for receipt of official communications

_____

_____

(Each joint venturer must sign. The manner of signing for each individual, partnership and corporation that is a party to the joint venture should be in the manner indicated above).

RETURN TO AGENDA

ADDENDUM NO. 1

FOX CREEK SUBDIVISION

STORM WATER IMPROVEMENTS

FAIRVIEW HEIGHTS, ILLINOIS

MARCH 3, 2016

Insert the following attached sheets and discard the originals sheets contained in the bid documents:

Sheet C2, South Basin Outlet Structure Details

Sheet S1, South Basin Structural Details

Acknowledge receipt of this addendum by signing, dating, and returning with your proposal.

James E Rossel

Signature

3/8/2016

Date

Haier Plumbing + Heating, Inc.

Company Name

301 N. Elkton St. PO Box 400

Street Address

Okawville IL 62271

City, State, Zip Code

RETURN TO AGENDA

CONTRACTOR CERTIFICATIONS

County ST. CLAIR
Local Public Agency FAIRVIEW HEIGHTS
Section Number N/A
Route FOX CREEK

The certifications hereinafter made by the bidder are each a material representation of fact upon which reliance is placed should the Department enter into the contract with the bidder.

1. **Debt Deliquency.** The bidder or contractor or subcontractor, respectively, certifies that it is not delinquent in the payment of any tax administered by the Department of Revenue unless the individual or other entity is contesting, in accordance with the procedures established by the appropriate revenue Act, its liability for the tax or the amount of tax. Making a false statement voids the contract and allows the Department to recover all amounts paid to the individual or entity under the contract in a civil action.

2. **Bid-Rigging or Bid Rotating.** The bidder or contractor or subcontractor, respectively, certifies that it is not barred from contracting with the Department by reason of a violation of either 720 ILCS 5/33E-3 or 720 ILCS 5/33E-4.

   A violation of Section 33E-3 would be represented by a conviction of the crime of bid-rigging which, in addition to Class 3 felony sentencing, provides that any person convicted of this offense or any similar offense of any state or the United States which contains the same elements as this offense shall be barred for 5 years from the date of conviction from contracting with any unit of State or local government. No corporation shall be barred from contracting with any unit of State or local government as a result of a conviction under this Section of any employee or agent of such corporation if the employee so convicted is no longer employed by the corporation and: (1) it has been finally adjudicated not guilty or (2) if it demonstrates to the governmental entity with which it seeks to contract and that entity finds that the commission of the offense was neither authorized, requested, commanded, nor performed by a director, officer or a high managerial agent in behalf of the corporation.

   A violation of Section 33E-4 would be represented by a conviction of the crime of bid-rotating which, in addition to Class 2 felony sentencing, provides that any person convicted of this offense or any similar offense of any state or the United States which contains the same elements as this offense shall be permanently barred from contracting with any unit of State or local government. No corporation shall be barred from contracting with any unit of State or local government as a result of a conviction under this Section of any employee or agent of such corporation if the employee so convicted is no longer employed by the corporation and: (1) it has been finally adjudicated not guilty or (2) if it demonstrates to the governmental entity with which it seeks to contract and that entity finds that the commission of the offense was neither authorized, requested, commanded, nor performed by a director, officer or a high managerial agent in behalf of the corporation.

3. **Bribery.** The bidder or contractor or subcontractor, respectively, certifies that it has not been convicted of bribery or attempting to bribe an officer or employee of the State of Illinois or any unit of local government, nor has the firm made an admission of guilt of such conduct which is a matter of record, nor has an official, agent, or employee of the firm committed bribery or attempted bribery on behalf of the firm and pursuant to the direction or authorization of a responsible official of the firm.

4. **Interim Suspension or Suspension.** The bidder or contractor or subcontractor, respectively, certifies that it is not currently under a suspension as defined in Subpart I of Title 44 Subtitle A Chapter III Part 6 of the Illinois Administrative Code. Furthermore, if suspended prior to completion of this work, the contract or contracts executed for the completion of this work may be cancelled.

RETURN TO AGENDA

Illinois Department of Transportation

Local Agency Proposal Bid Bond

Route: Fox Creek
County: St. Clair
Local Agency: Fairview Heights
Section: N/A

RETURN WITH BID

PAPER BID BOND

WE Haier Plumbing & Heating, Inc., 301 North Elkton, Okawville, IL 62271 as PRINCIPAL,

and Liberty Mutual Insurance Company, 175 Berkeley Street, Boston, MA 02117 (617) 357-9500 as SURETY,

are held jointly, severally and firmly bound unto the above Local Agency (hereafter referred to as "LA") in the penal sum of 5% of the total bid price, or for the amount specified in the proposal documents in effect on the date of invitation for bids whichever is the lesser sum. We bind ourselves, our heirs, executors, administrators, successors, and assigns, jointly pay to the LA this sum under the conditions of this instrument.

WHEREAS THE CONDITION OF THE FOREGOING OBLIGATION IS SUCH that, the said PRINCIPAL is submitting a written proposal to the LA acting through its awarding authority for the construction of the work designated as the above section.

THEREFORE if the proposal is accepted and a contract awarded to the PRINCIPAL by the LA for the above designated section and the PRINCIPAL shall within fifteen (15) days after award enter into a formal contract, furnish surety guaranteeing the faithful performance of the work, and furnish evidence of the required insurance coverage, all as provided in the "Standard Specifications for Road and Bridge Construction" and applicable Supplemental Specifications, then this obligation shall become void; otherwise it shall remain in full force and effect.

IN THE EVENT the LA determines the PRINCIPAL has failed to enter into a formal contract in compliance with any requirements set forth in the preceding paragraph, then the LA acting through its awarding authority shall immediately be entitled to recover the full penal sum set out above, together with all court costs, all attorney fees, and any other expense of recovery.

IN TESTIMONY WHEREOF, the said PRINCIPAL and the said SURETY have caused this instrument to be signed by their respective officers this 8th day of March, 2016

Principal

(Company Name)

Haier Plumbing & Heating, Inc.
(Company Name)

By: _____
(Signature and Title)

By: James E Rossel
(Signature and Title)

(If PRINCIPLE is a joint venture of two or more contractors, the company names, and authorized signatures of each contractor must be affixed.)

Surety

Liberty Mutual Insurance Company
(Name of Surety)

By: _____
(Signature of Attorney-in-Fact)
Susan M. Stefanski

STATE OF Illinois
COUNTY OF Washington
I, Nancy H. Rossel, a Notary Public in and for said county,
do hereby certify that James E. Rossel and Susan M. Stefanski
(Insert names of individuals signing on behalf of PRINCIPAL & SURETY)

who are each personally known to me to be the same persons whose names are subscribed to the foregoing instrument on behalf of PRINCIPAL and SURETY, appeared before me this day in person and acknowledged respectively, that they signed and delivered said instruments as their free and voluntary act for the uses and purposes therein set forth.

Given under my hand and notarial seal this 8th day of March, 2016

My commission expires 06/30/2016

Nancy H Rossel
(Notary Public)

OFFICIAL SEAL
NANCY H ROSSEL
NOTARY PUBLIC - STATE OF ILLINOIS
MY COMMISSION EXPIRES:06/30/19

ELECTRONIC BID BOND

☐ **Electronic bid bond is allowed (box must be checked by LA if electronic bid bond is allowed)**

The Principal may submit an electronic bid bond, in lieu of completing the above section of the Proposal Bid Bond Form. By providing an electronic bid bond ID code and signing below, the Principal is ensuring the identified electronic bid bond has been executed and the Principal and Surety are firmly bound unto the LA under the conditions of the bid bond as shown above. (If PRINCIPAL is a joint venture of two or more contractors, an electronic bid bond ID code, company/Bidder name title and date must be affixed for each contractor in the venture.)

Electronic Bid Bond ID Code

(Company/Bidder Name)

(Signature and Title)

Date

BLR 12230 (Rev. 7/05

THIS POWER OF ATTORNEY IS NOT VALID UNLESS IT IS PRINTED ON RED BACKGROUND.
This Power of Attorney limits the acts of those named herein, and they have no authority to bind the Company except in the manner and to the extent herein stated.

Certificate No. 6945330

American Fire and Casualty Company
The Ohio Casualty Insurance Company
Liberty Mutual Insurance Company
West American Insurance Company

RETURN TO AGENDA

POWER OF ATTORNEY

KNOWN ALL PERSONS BY THESE PRESENTS: That American Fire & Casualty Company and The Ohio Casualty Insurance Company are corporations duly organized under the laws of the State of New Hampshire, that Liberty Mutual Insurance Company is a corporation duly organized under the laws of the State of Massachusetts, and West American Insurance Company is a corporation duly organized under the laws of the State of Indiana (herein collectively called the "Companies"), pursuant to and by authority herein set forth, does hereby name, constitute and appoint, Barbara J. Lemm; Dennis D. Flatness; Dennis W. Lutz; Susan M. Stefanski; Taffra S. Holman

all of the city of St. Louis, state of MO each individually if there be more than one named, its true and lawful attorney-in-fact to make, execute, seal, acknowledge and deliver, for and on its behalf as surety and as its act and deed, any and all undertakings, bonds, recognizances and other surety obligations, in pursuance of these presents and shall be as binding upon the Companies as if they have been duly signed by the president and attested by the secretary of the Companies in their own proper persons.

IN WITNESS WHEREOF, this Power of Attorney has been subscribed by an authorized officer or official of the Companies and the corporate seals of the Companies have been affixed thereto this 14th day of April, 2015.

American Fire and Casualty Company
The Ohio Casualty Insurance Company
Liberty Mutual Insurance Company
West American Insurance Company

By: David M. Carey
David M. Carey, Assistant Secretary

STATE OF PENNSYLVANIA ss
COUNTY OF MONTGOMERY

On this 14th day of April, 2015, before me personally appeared David M. Carey, who acknowledged himself to be the Assistant Secretary of American Fire and Casualty Company, Liberty Mutual Insurance Company, The Ohio Casualty Insurance Company, and West American Insurance Company, and that he, as such, being authorized so to do, execute the foregoing instrument for the purposes therein contained by signing on behalf of the corporations by himself as a duly authorized officer.

IN WITNESS WHEREOF, I have hereunto subscribed my name and affixed my notarial seal at Plymouth Meeting, Pennsylvania, on the day and year first above written.

COMMONWEALTH OF PENNSYLVANIA
Notarial Seal
Teresa Pastella, Notary Public
Plymouth Twp., Montgomery County
My Commission Expires March 28, 2017
Member, Pennsylvania Association of Notaries

By: Teresa Pastella
Teresa Pastella, Notary Public

This Power of Attorney is made and executed pursuant to and by authority of the following By-laws and Authorizations of American Fire and Casualty Company, The Ohio Casualty Insurance Company, Liberty Mutual Insurance Company, and West American Insurance Company which resolutions are now in full force and effect reading as follows:

ARTICLE IV – OFFICERS – Section 12. Power of Attorney. Any officer or other official of the Corporation authorized for that purpose in writing by the Chairman or the President, and subject to such limitation as the Chairman or the President may prescribe, shall appoint such attorneys-in-fact, as may be necessary to act in behalf of the Corporation to make, execute, seal, acknowledge and deliver as surety any and all undertakings, bonds, recognizances and other surety obligations. Such attorneys-in-fact, subject to the limitations set forth in their respective powers of attorney, shall have full power to bind the Corporation by their signature and execution of any such instruments and to attach thereto the seal of the Corporation. When so executed, such instruments shall be as binding as if signed by the President and attested to by the Secretary. Any power or authority granted to any representative or attorney-in-fact under the provisions of this article may be revoked at any time by the Board, the Chairman, the President or by the officer or officers granting such power or authority.

ARTICLE XIII – Execution of Contracts – SECTION 5. Surety Bonds and Undertakings. Any officer of the Company authorized for that purpose in writing by the chairman or the president, and subject to such limitations as the chairman or the president may prescribe, shall appoint such attorneys-in-fact, as may be necessary to act in behalf of the Company to make, execute, seal, acknowledge and deliver as surety any and all undertakings, bonds, recognizances and other surety obligations. Such attorneys-in-fact subject to the limitations set forth in their respective powers of attorney, shall have full power to bind the Company by their signature and execution of any such instruments and to attach thereto the seal of the Company. When so executed such instruments shall be as binding as if signed by the president and attested by the secretary.

Certificate of Designation – The President of the Company, acting pursuant to the Bylaws of the Company, authorizes David M. Carey, Assistant Secretary to appoint such attorneys-in-fact as may be necessary to act on behalf of the Company to make, execute, seal, acknowledge and deliver as surety any and all undertakings, bonds, recognizances and other surety obligations.

Authorization – By unanimous consent of the Company's Board of Directors, the Company consents that facsimile or mechanically reproduced signature of any assistant secretary of the Company, wherever appearing upon a certified copy of any power of attorney issued by the Company in connection with surety bonds, shall be valid and binding upon the Company with the same force and effect as though manually affixed.

I, Gregory W. Davenport, the undersigned, Assistant Secretary, of American Fire and Casualty Company, The Ohio Casualty Insurance Company, Liberty Mutual Insurance Company, and West American Insurance Company do hereby certify that the original power of attorney of which the foregoing is a full, true and correct copy of the Power of Attorney executed by said Companies, is in full force and effect and has not been revoked.

IN TESTIMONY WHEREOF, I have hereunto set my hand and affixed the seals of said Companies this 8th day of March, 20 16.

By: Gregory W. Davenport
Gregory W. Davenport, Assistant Secretary

Not valid for mortgage, note, loan, letter of credit, currency rate, interest rate or residual value guarantees.

To confirm the validity of this Power of Attorney call 1-610-832-8240 between 9:00 am and 4:30 pm EST on any business day.

LMS_12873_122013

RETURN TO AGENDA

Illinois Department of Transportation

Apprenticeship or Training Program Certification

Return with Bid

Route	FOX CREEK
County	ST. CLAIR
Local Agency	FAIRVIEW HEIGHTS
Section	N/A

All contractors are required to complete the following certification:

☒ For this contract proposal or for all groups in this deliver and install proposal.

☐ For the following deliver and install groups in this material proposal:

Illinois Department of Transportation policy, adopted in accordance with the provisions of the Illinois Highway Code, requires this contract to be awarded to the lowest responsive and responsible bidder. The award decision is subject to approval by the Department. In addition to all other responsibility factors, this contract or deliver and install proposal requires all bidders and all bidders' subcontractors to disclose participation in apprenticeship or training programs that are (1) approved by and registered with the United States Department of Labor's Bureau of Apprenticeship and Training, and (2) applicable to the work of the above indicated proposals or groups. Therefore, all bidders are required to complete the following certification:

I. Except as provided in paragraph IV below, the undersigned bidder certifies that it is a participant, either as an individual or as part of a group program, in an approved apprenticeship or training program applicable to each type of work or craft that the bidder will perform with its own employees.

II. The undersigned bidder further certifies for work to be performed by subcontract that each of its subcontractors submitted for approval either (A) is, at the time of such bid, participating in an approved, applicable apprenticeship or training program; or (B) will, prior to commencement of performance of work pursuant to this contract, establish participation in an approved apprenticeship or training program applicable to the work of the subcontract.

III. The undersigned bidder, by inclusion in the list in the space below, certifies the official name of each program sponsor holding the Certificate of Registration for all of the types of work or crafts in which the bidder is a participant and that will be performed with the bidder's employees. Types of work or craft that will be subcontracted shall be included and listed as subcontract work. The list shall also indicate any type of work or craft job category for which there is no applicable apprenticeship or training program available.

Illinois Laborers + Contractors
Operating Engineers

RETURN TO AGENDA

IV. Except for any work identified above, any bidder or subcontractor that shall perform all or part of the work of the contract or deliver and install proposal solely by individual owners, partners or members and not by employees to whom the payment of prevailing rates of wages would be required, check the following box, and identify the owner/operator workforce and positions of ownership. ☐

The requirements of this certification and disclosure are a material part of the contract, and the contractor shall require this certification provision to be included in all approved subcontracts. The bidder is responsible for making a complete report and shall make certain that each type of work or craft job category that will be utilized on the project is accounted for and listed. The Department at any time before or after award may require the production of a copy of each applicable Certificate of Registration issued by the United States Department of Labor evidencing such participation by the contractor and any or all of its subcontractors. In order to fulfill the participation requirement, it shall not be necessary that any applicable program sponsor be currently taking or that it will take applications for apprenticeship, training or employment during the performance of the work of this contract or deliver and install proposal.

Bidder: Haier Plumbing & Heating, Inc. By: James G Russel (Signature)

Address: 301 N. Elkton St., P.O. Box 400 Okawville IL 62271 Title: President

RETURN WITH BID

RETURN TO AGENDA

Illinois Department of Transportation

Affidavit of Illinois Business Office

County ST. CLAIR
Local Public Agency FAIRVIEW HEIGHTS
Section Number N/A
Route FOX CREEK

State of Illinois)
) ss.
County of Washington)

I, James E. Rossel (Name of Affiant) of Okawville (City of Affiant), Illinois (State of Affiant),

being first duly sworn upon oath, states as follows:

1. That I am the President (officer or position) of Haier Plumbing & Heating, Inc. (bidder)
2. That I have personal knowledge of the facts herein stated.
3. That, if selected under this proposal, Haier Plumbing & Heating, Inc (bidder), will maintain a business office in the State of Illinois which will be located in Washington County, Illinois.
4. That this business office will serve as the primary place of employment for any persons employed in the construction contemplated by this proposal.
5. That this Affidavit is given as a requirement of state law as provided in Section 30-22(8) of the Illinois Procurement Code.

James E Rossel
(Signature)
James E. Rossel
(Print Name of Affiant)

This instrument was acknowledged before me on 8th day of March, 2016.

(SEAL)

OFFICIAL SEAL
NANCY H ROSSEL
NOTARY PUBLIC - STATE OF ILLINOIS
MY COMMISSION EXPIRES:06/30/19

Nancy H Rossel
(Signature of Notary Public)

RETURN TO AGENDA

JOB SPECIAL PROVISIONS

STORM SEWER IMPROVEMENTS

STORM SEWERS (SPECIAL)

Description: This work shall consist of construction corrugated metal sewer in accordance with Section 550 of the Standard Specifications for Road and Bridge Construction except as modified by the details and notes shown in the plans.

Basis of Payment: This work will be paid for at the contract unit price per foot of size specified for corrugated metal sewer. Pipe bedding, earth backfill, and warning tape as shown in the plans shall be included in cost of corrugated metal sewer. Disturbance of existing surface features such as fences shall be restored to existing conditions.

METAL END SECTIONS

Description: This work shall consist of construction metal end sections in accordance with Section 542 of the Standard Specifications for Road and Bridge Construction except as modified by the notes shown in the plans. Required grading shall be included in cost of end sections.

Basis of Payment: This work will be paid for at the contract unit price per each of size specified for end sections.

STORM SEWERS, CLASS A, TYPE 2 42"

Description: This work shall consist of construction storm sewer in accordance with Section 550 of the Standard Specifications for Road and Bridge Construction except as modified by the trench details and notes shown in the plans.

Basis of Payment: This work will be paid for at the contract unit price per foot for storm sewers. Pipe bedding, earth backfill, and warning tape as shown in the plans shall be included in cost of storm sewer.

INLETS, SPECIAL

Description: This work shall consist of construction curb inlets in accordance with Section 602 of the Standard Specifications for Road and Bridge Construction except as modified by the details for a complete curb inlet as shown in the plans.

Basis of Payment: This work will be paid for at the contract unit price per each for Inlets, Special.

TRENCH BACKFILL

Description: This work shall consist of construction granular backfill in accordance with Section 208 of the Standard Specifications for Road and Bridge Construction except as modified by the details shown in the plans.

Method of Measurement: Volume shall be computed as the length of trench, width of trench per plan details, and actual depth of trench backfill measured 12 inches above center of pipe.

RETURN TO AGENDA

Basis of Payment: This work will be paid for at the contract unit price per cubic yard for Trench Backfill. No separate payment will be made for pipe bedding as shown on plan details.

CLASS D PATCHES, TYPE III, 8 INCH

Description: This work shall consist of construction Class D Patches in accordance with Section 442 of the Standard Specifications for Road and Bridge Construction except patch will extend across two lanes of traffic as shown in the plans.

Basis of Payment: This work will be paid for at the contract unit price per square yard for Class D Patches, Type III, 8 Inch.

COMBINATION CONCRETE CURB & GUTTER, TYPE M (SPECIAL)

Description: This work shall consist of construction concrete curb and gutter in accordance with Section 606 of the Standard Specifications for Road and Bridge Construction except as modified by the details shown in the plans.

Basis of Payment: This work will be paid for at the contract unit price per foot for Combination Concrete Curb & Gutter, Type M (Special).

SOUTH BASIN OUTLET STRUCTURE

DRAINAGE STRUCTURE SPECIAL

Description: This work shall consist of drainage structure in accordance with Section 602 of the Standard Specifications for Road and Bridge Construction except as modified by the details as shown in the plans. Work shall include construction of complete drainage structure including concrete, rebar, excavation, backfill, and flowable fill.

Basis of Payment: This work will be paid for at the contract lump sum price for Drainage Structure Special.

STORM SEWERS (SPECIAL)

Description: This work shall consist of construction corrugated metal sewer in accordance with Section 550 of the Standard Specifications for Road and Bridge Construction except as modified by the details and notes shown in the plans. Pipe bedding and backfill shall be included in cost of corrugated metal sewer. Seeding costs shall be incidental to cost of pipe.

Basis of Payment: This work will be paid for at the contract unit price per foot of size specified for corrugated metal sewer.

RETURN TO AGENDA

INSURANCE

Add the following paragraph after paragraph (d) of Article 107.27 of The Standard Specifications for Road and Bridge Construction.

"The General Liability, Automobile Liability and Umbrella Liability coverage shall provide, by endorsement in the appropriate manner and form, City of Fairview Heights,

its Officers and Employees as Additional Insured with respect to policies, for occurrences arising in the whole or in the part out of the work and operations performed under this contract. The City of Fairview Heights shall be listed as Certificate Holder under the Worker's Compensation coverage. The specifics of the City of Fairview Heights Insurance requirements are as follows:

(1) **Workers Compensation and Employers Liability.**

(a) Workers compensation shall be provided according to the provisions of the Illinois Workers' Compensation Act, as amended. Notwithstanding the rating and financial size categories stated herein, coverage may be provided by a group self-insurer authorized in Section 4(a) of the Act and approved pursuant to the rules of the Illinois Department of Insurance.

(b) Employers Liability

i. Each accident $500,000

ii. Disease-policy limit $500,000

iii. Disease – each employee $500,000

(2) **Commercial General Liability.** Required liability insurance coverage shall be written in the occurrence form and shall provide coverage for operations of the Contractor/Vendor, operations

RETURN TO AGENDA

of subcontractors (contingent or protective liability); completed operations; broad form property damage and hazards of explosion, collapse and underground; and contractual liability. The general aggregate limit shall be endorsed on a per project basis.

(a) General Aggregate Limit $2,000,000

(b) Products-Completed Operations

Aggregate Limit $2,000,000

(c) Each Occurrence Limit $1,000,000

The coverage shall provide by an endorsement in the appropriate manner and form that the City, its officers, and employees shall be named as additional insureds with respect to the policies and any umbrella excess liability coverage for occurrences arising in whole or in part out of the work and operations performed. The City may accept a separate owner's protective liability policy in lieu of the City, its officers, and employees being insureds on the Contractor's/Vendor's policies.

(3) **Commercial Automobile Liability.** The policy shall cover owned, non-owned, and hired vehicles.

Bodily Injury & Property Damage

Liability Limit Each Occurrence $1,000,000

(4) **Umbrella Liability.** Any policy shall provide excess limits over and above the other insurance limits stated herein. The Contractor/Vendor may purchase

RETURN TO AGENDA

insurance for the full limits required or by a combination of primary policies for lesser limits and remaining limits provided by the umbrella policy.

All insurance shall remain in force during the period covering occurrences happening on or after the effective date and remain in effect during performance of the work and at all times thereafter when the Contractor/Vendor may be correcting, removing, or replacing defective work until notification of the date of final inspection. Termination or refusal to renew shall not be made without **thirty (30) days** prior written notice to the City by the insurer and the policies shall be endorsed so as to remove any language restricting or limiting liability concerning this obligation.

Certified copies of the original policies or certificate(s) of insurance by the insurer(s) issuing the policies and endorsements setting forth the coverage, limits and endorsements shall be filed with the City Clerk before the City will execute the contract. A certificate of insurance shall include a statement "the coverage and limits conform to the minimums required by this Section. Any exception or deviation shall be brought to the attention of the City for a ruling of acceptability. In no event shall any failure of the City to receive policies or certificates or to demand receipt be construed as a waiver of the Contractor's/Vendor's obligation to obtain and keep in force the required insurance."

All costs for insurance as specified herein will be considered as included in the cost of the contract. The Contractor/Vendor shall, at its expense and risk of delay, cease operations if the insurance required is terminated or reduced below the required amounts of coverage. Coverage in the minimum amounts set forth herein shall not be construed to relieve the Contractor/Vendor from its obligation to indemnify in excess of the coverage according to the contract.

RETURN TO AGENDA

INDEMNITY CLAUSE

A) Contractor shall indemnify and hold safe and harmless the City of Fairview Heights from all suites, actions, claims, demands, interest or payments brought on account of any injuries or damages (including damages for care and loss of services because of bodily injury, sickness or disease including death resulting there from) sustained by any person or property (including employees of the contractor or his subcontractors) in consequence of any neglect, fault, act or failure to act on the part of the contractor, his subcontractors, their servants, agents or employees, in the safe-guarding or performance of the work undertaken by the contractor in this agreement.

B) Contractor further agrees to indemnify the City of Fairview Heights against any costs and attorneys fees incurred as a result of any injuries or damages covered under the foregoing Paragraph A.

C) Contractor accordingly agrees to assume all risk and liabilities for accidents or damages that may occur to persons or property during the performance of the work under this agreement and these specifications, by reason of the negligence or carelessness of himself, his agents, his employees or his subcontractor's employees and agents.

D) Should any other contractor or subcontractor having or who shall hereafter have a contract with the City for the performance of work upon the site sustain

E) any damage through any act or omission of the contractor hereunder or through any act or omission of any subcontractor of contractor, contractor agrees to reimburse such other contractor for all such damages and to indemnify and hold the City harmless from all such claims.

F) This agreement shall be binding on and insure to the benefit of the heirs, executors, administrators, successors and assigns of the respective parties thereof.

RETURN TO AGENDA

PROJECT LABOR AGREEMENT

The following pages contain a Project Labor Agreement adopted by the City of Fairview Heights along with the corresponding legislation. Please pay particular attention to the letter appearing behind the Agreement Resolution.

Please sign the Agreement and **RETURN WITH BID.**

RETURN TO AGENDA

RESOLUTION NO. 3887-2015

A RESOLUTION AUTHORIZING THE MAYOR TO ENTER INTO A PROJECT LABOR AGREEMENT WITH THE SOUTHWESTERN ILLINOIS BUILDING & CONSTRUCTION TRADES COUNCIL.

WHEREAS, the City of Fairview Heights, Illinois ("the City"), annually expends substantial sums in the purchase of construction goods and services on property owned by the City, and

WHEREAS, said expenditures constitute a major investment in regard to the City's property, and the City finds itself competing in the private marketplace for these construction goods and services, and,

WHEREAS, time lost due to labor strife and jurisdictional disputes can cause serious delays in the completion of construction projects and consequently can cause an increase in the cost of said construction projects, and,

WHEREAS, there are trade unions that are recognized by the National Labor Relations Board, and which have as their primary duties the negotiation of wages and hours, no-strike agreements, and other matters on behalf of their members, and, furthermore, have control of the apprenticeship of new members and the continued training of current members, and

WHEREAS, Project Labor Agreements have generally proven to be of particular economic benefit to property owners, including states and their political subdivisions, for their major construction, alteration, painting, or repair projects (including any closely interrelated series of projects), particularly those which extend for a substantial period of time and involve a substantial number of construction contractors and subcontractors or a substantial number of construction trades and specialized craft workers, and

RETURN TO AGENDA

WHEREAS, Project Labor Agreements facilitate the timely and efficient completion of such projects by:

a. Making available a ready and adequate supply of high trained and skilled craft workers, and,

b. Permitting public and private owners and contractors to more accurately predict project labor costs at the bidding stage, and,

c. Establishing working conditions for all construction crafts for the duration of the project, and

d. Providing a legally enforceable means of assuring labor stability and labor peace over the life of such project thereby reducing the possibility of interruptions and delays resulting from labor disputes, and,

WHEREAS, the generally short term nature of employment in the construction industry makes post-hire collective bargaining difficult and unrealistic, and

WHEREAS, the National Labor Relations Act, 29 U.S.C. Section 151, et. seq., allows for a collective bargaining agreement between a labor organization and an employer in the construction industry relating to the contracting or subcontracting of work to be done at the site of the construction, alteration, painting, or repair of a building, structure, or other work, and

WHEREAS, the courts have upheld the right of states and their subdivisions, as proprietors, to enter into construction contracts with project managers or general contractors which contain said Project Labor Agreement provisions and have found such Project Labor Agreement provisions not to be in violation of preemption under the National Labor Relations Act or Employer Retirement Income Security Act, the Equal

RETURN TO AGENDA

Protection and Due Process Clauses of the 14th Amendment, and the Sherman Anti-Trust Act. 15 U.S.C., Section 1, et. seq.

NOW, THEREFORE, IN VIEW OF THE FOREGOING ECONOMIC BENEFITS TO BE DERIVED BY THE CITY THROUGH SUCH LABOR AGREEMENT, BE IT RESOLVED BY THE CITY COUNCIL OF THE CITY OF FAIRVIEW HEIGHTS:

That the Mayor be and is hereby authorized to enter into a Project Labor Agreement and that the City of Fairview Heights, Illinois and its committees, departments and agents shall henceforth, with respect to the construction, alteration, painting, or repair of its property, as a part of the specifications in regard to such construction, alteration, painting, or repair of its property, require that any successful bidder enter into the attached "City of Fairview Heights, Illinois Project Labor Agreement" (or as hereafter amended), (attached hereto and marked as Exhibit A) covering such construction, alteration, painting, or repair projects.

This Resolution shall be in full force and effect from and after its passage and approval as provided by law.

PASSED: January 20, 2015

APPROVED: January 21, 2015

MARK T. KUPSKY, CITY CLERK - CITY OF FAIRVIEW HEIGHTS SEAL

ATTEST:

MARK T. KUPSKY, CITY CLERK

SPONSORED BY: Public Works & Municipal Complex Committee

GAIL D. MITCHELL, MAYOR
CITY OF FAIRVIEW HEIGHTS

ROLL CALL ON ALDERMEN VOTING "YEA"

CAROL WARNER
JUSTIN GOUGH
JOSHUA FRAWLEY
PAT BAESKE
LINDA ARNOLD
ROGER LOWRY
DENISE WILLIAMS
DENNIS BARICEVIC
SCOTT GREENWALD

ROLL CALL ON ALDERMEN VOTING "NAY"

BONNIE CROSSLEY

RETURN TO AGENDA

CCV
JSH
J Snider
DRW.
File
1/29/15

Chartered 1907

Southwestern Illinois
Building & Construction Trades Council
AFL-CIO

2A Meadow Heights Professional Park, Collinsville, IL 62234
Phone 618-344-6050 Fax 618-344-6285

January 26, 2015

JAN 2 9 2014

Christopher Volkman
Director of Public Works
City of Fairview Heights
10025 Bunkum Road
Fairview Heights IL 62208

Dear Mr. Volkman,

The Southwestern Illinois Building and Construction Trades Council is in receipt of Resolution No. 3887-2015 with Exhibit A wherein the City of Fairview Heights adopted the Project Labor Agreement (PLA).

Please be advised the Project Labor Agreement (Exhibit A) does not require a signature from the Building Trades until after a project is awarded.

When a project is let for bid, the contractor is required to sign the PLA and submit it, along with his bid documents, to the City. Only after an award is made on a project is the PLA submitted to the Building Trades (by either the contractor or the City – your choice) for the Executive Secretary's signature. The countersigned agreement is then returned to the contractor. The contractor will be contacted directly by this office to schedule the required pre-job conference.

Should you have any questions, please do not hesitate to contact me.

Sincerely,

Dale Stewart
Executive Secretary-Treasurer

/rh

RETURN WITH BID

RETURN TO AGENDA

"EXHIBIT A"

CITY OF FAIRVIEW HEIGHTS, ILLINOIS
PROJECT LABOR AGREEMENT

As adopted on November 10, 2004 by the
Southwestern Illinois Building & Construction Trades Council Board of Business Agents

This Agreement is entered into this _____ day of _____, 2015 by and between _____ and the Southwestern Illinois Building Trades Council (SIBTC) for and on behalf of its affiliates which sign a "Union Letter of Assent" (Signatory Union Affiliates) for this Project Labor Agreement, hereinafter referred to as the "Union." This Agreement shall apply to work performed by the Employer and its Contractors and Subcontractors on Construction known as the_____.

ARTICLE I - INTENT AND PURPOSES

1.1 This Project Agreement shall apply and is limited to the recognized and accepted historical definition of new construction work under the direction of and performed by the Contractor(s), of whatever tier, which may include the Project Contractor, who have contracts awarded for such work on the Project. Such work shall include site preparation work and dedicated off-site work.

The Project is defined as:

_____.

1.2 It is agreed that the Project Contractor shall require all Contractors of whatever tier who have been awarded contracts for work covered by this Agreement, to accept and be bound by the terms and conditions of this Project Agreement by executing the Letter of Assent (Attachment A) prior to commencing work. The Project Contractor shall assure compliance with this Agreement by the Contractors. It is further agreed that the terms and conditions of this Project Agreement shall supersede and override terms and conditions of any and all other national, area, or local collective bargaining agreements, (including all vertical agreements), except for all work performed under the NTL Articles of Agreement, the National Stack/Chimney Agreement, the National Cooling Tower Agreement, and the National Agreement of the International Union of Elevator Constructors.

1.3 The Contractor agrees to be bound by the terms of the Collective Bargaining Agreements and amendments thereto of the Signatory Union Affiliates and the applicable employers association, if any, with the Signatory Union Affiliates with which it has a present bargaining relationship. If there has previously been no such bargaining relationship, the contractor or subcontractor shall sign and be bound to all such agreements with Signatory Union Affiliates as outlined in the scope of work in the required pre-job conference. Such agreements are incorporated herein by reference. In order to comply with the requirements of the various fringe benefit funds to which the Contractor is to contribute, the Contractor shall sign such participation agreements as are necessary and will honor the fringe benefit collection procedures as required by the Collective Bargaining Agreement with the Signatory Union Affiliate.

RETURN TO AGENDA

1.4 The Contractor and the Union agree that should the Collective Bargaining Agreement (CBA) of any Signatory Union Affiliate expire prior to the completion of this project, the expired contracts' terms will be maintained until a new CBA is ratified. The wages, and fringe benefits included in any new CBA will be effective on the effective date of the newly negotiated CBA unless wage and fringe benefit retroactivity is agreed upon by the bargaining parties.

1.5 Nothing contained herein shall be construed to prohibit, restrict or interfere with the performance of any other operation work, or function which may occur at the Project site or be associated with the development of the Project.

1.6 This Agreement shall only be binding on the signatory parties hereto and shall not apply to their parents, affiliates, subsidiaries, or Non-Signatory Union Affiliates.

1.7 The Owner and/or the Project Contractor have the absolute right to select any qualified bidder for the award of contracts on this Project without reference to the existence or nonexistence of any agreements between such bidder and any party to this Agreement; provided, however, only that such bidder is willing, ready and able to become a party to and comply with this Project Agreement, should it be designated the successful bidder.

1.8 Items specifically excluded from the scope of this Agreement include but are not limited to the following; [list all items to be excluded].

1.9 The provisions of this Project Agreement shall not apply to _____(Owner), and nothing contained herein shall be construed to prohibit or restrict _____(Owner) or its employees from performing work not covered by this Project Agreement on the Project site. As areas and systems of the Project are inspected and construction tested by the Project Contractor or Contractors and accepted by the Owner, the Project Agreement will not have further force or effect on such items or areas, except when the Project Contractor or Contractors are directed by the Owner to engage in repairs, modifications, check-out, and warranty functions required by its contract with the Owner during the term of this Agreement.

1.10 It is understood that the Owner, at its sole option, may terminate, delay and/or suspend any or all portions of the Project at any time.

1.11 It is understood that the liability of any employer and the liability of a Signatory Union Affiliate and the SIBTC under this Agreement shall be several and not joint. Provided that the SIBTC or a Signatory Union Affiliate comply with their own obligations under this Agreement, the SIBTC and non-breaching Signatory Union Affiliates will not be liable for a breach of this Agreement by a breaching Signatory Union Affiliate or any action taken by a Non-Signatory Union Affiliate. The Union agrees that this Agreement does not have the effect of creating any joint employer status between or among the Owner, Contractor(s) or any employer.

1.12 Each affiliate union of the SIBTC representing employees engaged in construction work covered by this Agreement shall be requested to sign the "Union Letter of Assent", in the form attached hereto; provided, that the failure of any affiliate union to sign such Union Letter of Assent prior to commencement of construction work shall not diminish the applicability of this Agreement to the SIBTC and the union affiliates which have signed a Union Letter of Assent. Affiliates unions that have signed the Union Letter of Assent will be referred to as "Signatory Union Affiliates" and affiliate

unions that have not signed the Union Letter of Assent will be referred to as "Non-Signatory Union Affiliates."

ARTICLE II - RECOGNITION

2.1 The Contractor recognizes the SIBTC and the Signatory Union Affiliates as the sole and exclusive bargaining representatives for its craft employees employed on the job site. Signatory Union Affiliates will have recognition on the project for their craft.

ARTICLE III - ADMINISTRATION OF AGREEMENT

3.1 In order to assure that all parties have a clear understanding of the Agreement, to promote harmony and address potential problems, a pre-job conference will be held with the Contractor, SIBTC Representatives and all signatory parties prior to the start of any work on the project.

3.2 Representatives of the Contractor and the Union shall meet as required but not less than once a month to review the operation of this Agreement. The representatives at this meeting shall be empowered to resolve any dispute over the intent and application of the Agreement.

3.3 The Contractor shall make available in writing to the Union no less than one week prior to these meetings a job status report, planned activities for the next 30 day period, actual numbers of craft employees on the project and estimated numbers of employees by craft required for the next 30 day period. The purpose of this report is to allow time to address any potential jurisdictional problems and to ensure that no party signatory to the Agreement is hindering the continuous progress of the project through a lack of planning or shortage of manpower.

ARTICLE IV - HOURS OF WORK OVERTIME SHIFTS & HOLIDAYS

4.1 The standard work day shall be an established consecutive eight (8) hour period between the hours of 7:00 a.m. and 5:00 p.m. with one-half hour designated as unpaid period for lunch. The standard work week shall be five (5) consecutive days of work commencing on Monday. Starting time which is to be established at the pre-job conference will be applicable to all craft employees on the project. Should job conditions dictate a change in the established starting time and/or a staggered lunch period on certain work of the project or with individual crafts, the Contractor, Business Managers of the Signatory Union Affiliates involved and the SIBTC shall mutually agree to such changes. If work schedule change cannot be mutually agreed to between these parties, the hours fixed in the Agreement shall prevail.

4.2 All time before and after the established work day of eight (8) hours, Monday through Friday and all time on Saturday shall be paid in accordance with each crafts current collective bargaining agreement. All time on Sundays and Holidays shall be paid for at the rate of double time.

(a) Fringe benefit payments for all overtime work shall be paid in accordance with each Signatory Union Affiliate's current Collective Bargaining Agreement.

4.3 Shift work, if used, shall be as provided in the collective bargaining agreement of each affected Signatory Union Affiliate.

4.4 Recognized Holidays shall be as follows: New Year's Day, Memorial Day, Fourth of July, Labor Day, Veterans Day *(to be celebrated on November 11)*, Thanksgiving Day and Christmas Day. No work will be performed on Labor Day under any consideration, except in an extreme emergency and then only after consent is given by the Business Manager of the Signatory Union Affiliates.

ARTICLE V - ABSENTEEISM

5.1 The Contractor and the Union agree that chronic and/or unexcused absenteeism is undesirable and must be controlled. Employees that develop a record of such absenteeism shall be identified by the Contractor to the appropriate referral facility and the Contractor shall support such action with the work record of the involved employee. Any employee terminated for such absenteeism shall not be eligible for rehire on the project for a period of no less than ninety (90) days.

ARTICLE VI-MANAGEMENT RIGHTS

6.1 The Contractor retains and shall exercise full and exclusive authority and responsibility for the management of its operations, except as expressly limited by the terms of this Agreement and the collective bargaining agreements of the Signatory Union Affiliates.

ARTICLE VII - GENERAL WORKING CONDITIONS

7.1 Employment begins and ends at the project site, to be determined at the Pre-Job Conference.

7.2 Employees shall be at their place of work at the starting time and shall remain at their place of work until quitting time. The parties reaffirm their policy of a fair day's work for a fair day's pay.

7.3 The Contractor may utilize brassing, or other systems to check employees in and out. Should such procedures be required, the techniques and rules regarding such procedures shall be established by mutual consent of the parties at the pre-job conference.

7.4 There shall be no limit on production by workmen nor restrictions on the full use of tools or equipment. Craftsmen using tools shall perform any work of their trade and shall work under the direction of the craft foreman. There shall be no restrictions on efficient use of manpower other than as may be required by safety regulations.

7.5 Crew Foreman shall be utilized as per the existing collective bargaining agreements. The Contractor agrees to allow crew foremen ample time to direct and supervise their crew. The Union agrees there will be no restrictions placed on crew foreman's ability to handle tools and materials.

7.6 The Contractor may utilize the most efficient methods or techniques of construction, tools or other labor saving devices to accomplish the work. Practices not a part of the terms and conditions of this Agreement will not be recognized.

RETURN TO AGENDA

7.7 Should overtime work be required, the Contractor will have the right to assign specific employees and/or crews to perform such overtime work as is necessary to accomplish the work.

7.8 The Contractor may establish such reasonable project rules as the Contractor deems appropriate. These rules will be reviewed and established at the pre-job conference and posted at the project site by the Contractor.

7.9 It is recognized that specialized or unusual equipment may be installed on the project and in such cases, the Union recognizes the right of the Contractor to involve the equipment supplier or vendor's personnel in supervising the setting of the equipment, making modifications and final alignment which may be necessary prior to and during the start-up procedure, in order to protect factory warranties.

7.10 In order to promote a harmonious relationship between the equipment or vendor's personnel and the Building Trades craftsmen, a meeting shall be held between the Contractor and the Unions prior to any involvement on the project by these personnel. The Contractor will inform the Union of the nature of involvement by these personnel and the numbers of personnel to be involved, allowing ample time for the Union representatives to inform their stewards prior to the start of any work.

ARTICLE VIII - SAFETY

8.1 The employees covered the terms of this Agreement shall at all times while in the employ of the Contractor be bound by the safety rules and regulations as established by the Contractor in accordance with the Construction Safety Act and OSHA.

a. These rules and regulations will be published and posted at conspicuous places throughout the project.

8.2 In accordance with the requirements of OSHA, it shall be the exclusive responsibility of each Contractor on a jobsite to which this Agreement applies, to assure safe working conditions for its employees and compliance by them with any safety rules contained herein or established by the Contractor. Nothing in this Agreement will make the SIBTC or any of its affiliates liable to any employees or to other persons in the event that injury or accident occurs.

ARTICLE IX - SUBCONTRACTING

9.1 The Project Contractor agrees that neither it nor any of its contractors or subcontractors will subcontract any work to be done on the Project except to a person, firm or corporation who is or agrees to become party to this Agreement. Any contractor or subcontractor working on the Project shall, as a condition to working on said Project, become signatory to and perform all work under the terms of this Agreement.

ARTICLE X - UNION REPRESENTATION

10.1 Authorized representatives of the SIBTC and its Signatory Union Affiliates shall have access to the project provided they do not interfere with the work of the employees and further provided that such representatives fully comply with the visitor and security rules established for the project.

10.2 Each Signatory Union Affiliate shall have the right to designate a working journeyman as a steward. Such designated steward shall be a qualified worker performing the work of that craft and shall not exercise any supervisory functions. Each steward shall be concerned with the employees of the steward's employer and not with the employees of any other employer.

10.3 The working steward will be paid at the applicable wage rate for the job classification in which he is employed.

10.4 The working steward shall not be discriminated against because of his activities in performing his duties as steward, and except as otherwise provided in local agreements, shall be the last employee in his craft to be laid off in any reduction in force. Stewards will be subject to discharge to the same extent that other employees are only after notification to the Union Representative. The Contractor will permit stewards sufficient time to perform the duties inherent to a steward's responsibilities. Stewards will be offered available overtime work if qualified.

ARTICLE XI - DISPUTES AND GRIEVANCES

11.1 This Agreement is intended to provide close cooperation between management and labor. Each of the Signatory Union Affiliates will assign a representative to this Project for the purpose of completing the construction of the Project economically, efficiently, continuously, and without interruptions, delays, or work stoppages.

11.2 The Contractors, Union, and the employees, collectively and individually, realize the importance to all parties to maintain continuous and uninterrupted performance of the work of the Project, and agree to resolve disputes in accordance with the grievance arbitration provisions set forth in this Article.

11.3 Any question or dispute arising out of and during the term of this Project Agreement (other than trade jurisdictional disputes) shall be considered a grievance and subject to resolution under the following procedures:

Step 1. (a) When any employee subject to the provisions of this Agreement feels he or she is aggrieved by a violation of this Agreement, he or she, through his or her local union business representative or job steward, shall, within five (5) working days after the occurrence of the violation, give notice to the work-site representative of the involved Contractor stating the provision(s) alleged to have been violated. The business representative of the local union or the job steward and the work-site representative of the involved Contractor and the Project Contractor shall meet and endeavor to adjust the matter within three (3) working days after timely notice has been given. The representative of the Contractor shall keep the meeting minutes and shall respond to the Union representative in writing (copying the Project Contractor) at the conclusion of the meeting but not later than twenty-four (24) hours thereafter. If they fail to resolve the matter within the prescribed period, the grieving party may, within forty-eight (48) hours thereafter, pursue Step 2 of the Grievance Procedure, provided the grievance is reduced to writing, setting forth the relevant information concerning the alleged grievance, including a short description thereof, the date on which the grievance occurred, and the provision(s) of the Agreement alleged to have been violated.

(b) Should the Local Union(s) or the Project Contractor or any Contractor have a dispute with the other party and, if after conferring, a settlement is not reached within three (3) working days, the dispute may be reduced to writing and proceed to Step 2 in the same manner as outlined herein for the adjustment of an employee complaint.

RETURN TO AGENDA

Step 2. The International Union Representative and the involved Contractor shall meet within seven (7) working days of the referral of a dispute to this second step to arrive at a satisfactory settlement thereof. Meeting minutes shall be kept by the Contractor. If the parties fail to reach an agreement, the dispute may be appealed in writing in accordance with the provisions of Step 3 within seven (7) calendar days thereafter.

Step 3. (a) If the grievance has been submitted but not adjusted under Step 2, either party may request in writing, within seven (7) calendar days thereafter, that the grievance be submitted to an Arbitrator mutually agreed upon by them. The Contractor and the involved Union shall attempt mutually to select an arbitrator, but if they are unable to do so, they shall request the American Arbitration Association to provide them with a list of arbitrators from which the Arbitrator shall be selected. The rules of the American Arbitration Association shall govern the conduct of the arbitration hearing. The decision of the Arbitrator shall be formal and binding on all parties. The fee and expenses of such Arbitration shall be borne equally by the Contractor and the involved Local Union(s).

(b) Failure of the grieving party to adhere to the time limits established herein shall render the grievance null and void. The time limits established herein may be extended only by written consent of the parties involved at the particular step where the extension is agreed upon. The Arbitrator shall have the authority to make decisions only on issues presented to him or her, and he or she shall not have authority to change, amend, add to or detract from any of the provisions of this Agreement.

11.4 The Project Contractor and Owner shall be notified of all action at Steps 2 and 3 and shall, upon their request, be permitted to participate in all proceedings at these steps.

ARTICLE XII - JURISDICTIONAL DISPUTES

12.1 The assignment of work will be solely the responsibility of the Contractor performing the work involved, in accordance with applicable Collective Bargaining Agreements and past practices. To the extent that past practice is a factor in assigning work under the Project Labor Agreement, including assignments under any collective bargaining agreements to which any of the signatory contractors hereto may be a party, the practice to be applied shall be that followed within the geographical area encompassed by the Southwestern Illinois Building and Construction Trades Council. The practice followed in any other geographical area, even though a Union signatory to this Project Labor Agreement may also represent employees in that area, shall not be a factor in the assignment. All jurisdictional disputes between or among Building and Construction Trades Unions and employees and the Contractor, parties to this Agreement, shall be settled and adjusted according to the present Plan established by the Building and Construction Trades Department or any other plan or method of procedure that may be adopted in the future by the Building and Construction Trades Department. Decisions rendered shall be final, binding and conclusive on the Contractor and Union parties to this Agreement.

12.2 All jurisdictional disputes shall be resolved without the occurrence of any strike, work stoppage, or slow-down of any nature, and the Contractor's assignment shall be adhered to until the dispute is resolved. Individuals violating this section shall be subject to immediate discharge.

12.3 Each Contractor will conduct a pre-job conference with the appropriate Building and Construction Trades Council prior to commencing work. The Project Contractor and the Owner will be advised in advance of all such conferences and may participate if they wish.

RETURN TO AGENDA

ARTICLE XIII - WORK STOPPAGES AND LOCKOUTS

13.1 During the term of this Agreement there shall be no strikes, picketing, work stoppages, slow downs or other disruptive activity for any reason by the SIBTC, its Signatory Union Affiliates or by any employee and there shall be no lockout by the Contractor. Failure of any Signatory Union Affiliate or employee to cross any picket line established at the project site is a violation of this Article.

13.2 The SIBTC and its Signatory Union Affiliates shall not sanction, aid or abet, encourage or continue any work stoppage, picketing or other disruptive activity and will not make any attempt of any kind to dissuade others from making deliveries to or performing services for or otherwise doing business with the Contractor at the project site. Should any of these prohibited activities occur the SIBTC and the Signatory Union Affiliates will take the necessary action to end such prohibited activities.

13.3 No employee shall engage in any activities which violate this Article. Any employee who participates in or encourages any activities which interfere with the normal operation of the project shall be subject to disciplinary action, including discharge, and if justifiably discharged for the above reasons, shall not be eligible for rehire on the same project for a period of not less than ninety (90) days.

13.4 Neither the SIBTC nor its Signatory Union Affiliates, will be liable for acts of employees for whom it has no responsibility. The principal officer or officers of the SIBTC will immediately instruct, order and use the best efforts of his office to cause Signatory Union Affiliates to cease any violations of this Article. The SIBTC in its compliance with this obligation shall not be liable for unauthorized acts of Signatory Union Affiliates or Non-Signatory Union Affiliates. The principal officer or officers of any involved Signatory Union Affiliate will immediately instruct, order or use the best effort of his office to cause the employees the union represents to cease any violations of this Article. A union complying with this obligation shall not be liable for unauthorized acts of employees it represents. The failure of the Contractor to exercise its right in any instance shall not be deemed a waiver of its right in any other instance.

13.5 In lieu of any action at law or equity, any party shall institute the following procedure when a breach of this Article is alleged, after all involved parties have been notified of the fact.

a. The party invoking this procedure shall notify_____ whom the parties agree shall be the permanent arbitrator under this procedure. In the event the permanent arbitrator is unavailable at any time, he shall appoint his alternate. Notice to the arbitrator shall be by the most expeditious means available, with notice by telegram or any effective written means to the party alleged to be in violation and all involved parties.

b. Upon receipt of said notice the arbitrator named above shall set and hold a hearing within twenty-four (24) hours if it is contended the violation still exists but not before twenty-four (24) hours after the telegraph notice to all parties involved as required above.

RETURN TO AGENDA

c. The Arbitrator shall notify the parties by telegram or any other effective written means, of the place and time he has chosen for this hearing. Said hearing shall be completed in one session. A failure of any party or parties to attend said hearing shall not delay the hearing of evidence or issuance of an Award by the Arbitrator.

d. The sole issue at the hearing shall be whether or not a violation of this Article has in fact occurred. The Award shall be issued in writing within three (3) hours after the close of the hearing, and may be issued without an Opinion. If any party desires an Opinion, one shall be issued within fifteen (15) days, but its issuance shall not delay compliance with, or enforcement of, the Award. The Arbitrator may order cessation of the violation of this Article, and such Award shall be served on all parties by hand or registered mail upon issuance.

e. Such Award may be enforced by any court of competent jurisdiction upon the filing of the Agreement and all other relevant documents referred to herein above in the following manner. Telegraphic notice of the filing of such enforcement proceedings shall be given to the other party. In the proceeding to obtain a temporary order enforcing the Arbitrator's Award as issued under Section 13.5 of this Article, all parties waive the right to a hearing and agree that such proceedings may be exparte. Such agreement does not waive any party's right to participate in a hearing for a final order of enforcement. The Court's order or orders enforcing the Arbitrator's Award shall be served on all parties by hand or by delivery to their last known address or by registered mail.

f. Any rights created by statue or law governing arbitration proceedings inconsistent with the above procedure or which interfere with compliance therewith are hereby waived by parties to whom they accrue.

g. The fees and expenses of the Arbitrator shall be borne by the party or parties found in violation, or in the event no violation is found, such fees and expenses shall be borne by the moving party.

h. If the Arbitrator determines in accordance with Section 13.5 that the SIBTC or a Signatory Union Affiliate has violated Article XIII, the SIBTC or the Signatory Union Affiliate shall, within eight (8) hours of receipt of this Award, direct all employees they represent at the project to immediately return to work. If the employees do not return to work at the beginning of the next regularly scheduled shift following receipt of the Arbitrator's Award, and the SIBTC or Signatory Union Affiliate have not complied with Section 13.4 above, then the SIBTC or the Signatory Union Affiliate which has not complied with Section 13.4 shall pay the sum of ten thousand dollars ($10,000) as liquidated damages to the affected owner, and shall pay an additional ten thousand dollars ($10,000) per shift for each shift thereafter on which the employees have not returned to work. The Arbitrator shall retain jurisdiction to determine compliance with this Section and Section 13.4, and to assess liquidated damages.

RETURN TO AGENDA

ARTICLE XIV - GENERAL SAVINGS CLAUSE

14.1 If any Article or provision of this Agreement shall be declared invalid, inoperative or unenforceable by operation of law or by any of the above mentioned tribunals of competent jurisdiction, the remainder of this Agreement or the application of such Article or provision to persons or circumstances other than those as to which it has been held invalid, inoperative or unenforceable shall not be affected thereby.

ARTICLE XV - TERM OF AGREEMENT

15.1 This Agreement shall be in full force as of and from the date of the Notice of Award to the Final Acceptance of all applicable contractors.

IN WITNESS WHEREOF, the respective duly authorized representatives of the parties hereto have executed this Agreement on the date set forth opposite their respective signatures.

Date: 3/8/16

James E Rosel
(Contractor Representative)

Haier Plumbing & Heating, Inc.
(Firm's Name)

301 N. Elkton St. PO Box 400
(Firm's Address)

Okawville IL 62271

(618) 243-5908
(Phone Number)

Date: _____

Dale Stewart, Exec. Sec.-Treas.
Southwestern Illinois Building &
Construction Trades Council
2A Meadow Heights Professional Park
Collinsville, IL 62234

RETURN TO AGENDA

ATTACHMENT A
(CONTRACTOR LETTER OF ASSENT)

Note: All contractors of whatever tier (except those construction contractors who have directly signed the Agreement) shall execute the following Letter of Assent prior to commencing work.

==========

CONTRACTOR LETTERHEAD

DATE

To: (Name of Owner)
(Address of Owner)

RE: _____ *Construction Project Agreement*

Dear Sir:

Pursuant to Article I, Section 1.2, of the above reference Agreement, the undersigned contractor hereby agrees that it will be bound by and comply with all terms and conditions of said Project Labor Agreement, and any amendments thereto.

This Letter of Assent will remain in effect for the duration of the Agreement, and any extensions, after which this understanding will automatically terminate, except as provided for in Article I, Section 1.9, of the Agreement.

Sincerely,

_____
(Name of Contractor of Subcontractor)

*By:*_____

*Title:*_____

RETURN TO AGENDA

INSTRUCTION TO BIDDERS

Award of Contract

The general contract will be awarded to the lowest responsible and eligible general bidder complying with the conditions and requirements provided in these instructions, the bid forms and the other bid documents. A "responsible" bidder is a bidder demonstrably possessing the skill, ability and integrity necessary to faithfully perform the work called for by the contract, based upon a determination of competent workmanship and financial soundness. An "eligible" bidder is a bidder who is not debarred from bidding under any applicable law, and who shall certify that he is able to furnish labor that can work in harmony with all other elements of labor employed or to be employed on the project. In the interests of such harmony, the long-term supply of skilled manpower, and to provide a legally enforceable means of assuring labor stability and labor peace over the life of the project, each successful bidder and any and all levels of subcontractors, as a condition of being awarded a contract or subcontract, shall be required to enter into a Project Labor Agreement for the project known as:_____

_____

located in the (Municipality) with the Southwestern Illinois Building and Construction Trades Council, AFL-CIO, and its Signatory Affiliated Local Unions for the development and construction of the Project, and will be bound by the provisions of that agreement in the same manner as any other provision of the contract.

RETURN TO AGENDA

INDEX
FOR
SUPPLEMENTAL SPECIFICATIONS
AND RECURRING SPECIAL PROVISIONS

Adopted January 1, 2015

This index contains a listing of SUPPLEMENTAL SPECIFICATIONS, frequently used RECURRING SPECIAL PROVISIONS, and LOCAL ROADS AND STREETS RECURRING SPECIAL PROVISIONS.

ERRATA Standard Specifications for Road and Bridge Construction (Adopted 1-1-12) (Revised 1-1-15)

SUPPLEMENTAL SPECIFICATIONS

Std. Spec. Sec.		Page No.
101	Definition of Terms	1
102	Advertisement, Bidding, Award, and Contract Execution	2
105	Control of Work	3
106	Control of Materials	5
107	Legal Regulations and Responsibility to Public	6
108	Prosecution and Progress	14
109	Measurement and Payment	15
202	Earth and Rock Excavation	17
211	Topsoil and Compost	19
250	Seeding	20
253	Planting Woody Plants	21
280	Temporary Erosion and Sediment Control	23
312	Stabilized Subbase	24
406	Hot-Mix Asphalt Binder and Surface Course	25
407	Hot-Mix Asphalt Pavement (Full-Depth)	28
420	Portland Cement Concrete Pavement	32
424	Portland Cement Concrete Sidewalk	34
440	Removal of Existing Pavement and Appurtenances	35
502	Excavation for Structures	36
503	Concrete Structures	37
504	Precast Concrete Structures	40
506	Cleaning and Painting New Steel Structures	41
512	Piling	42
516	Drilled Shafts	43
521	Bearings	44
540	Box Culverts	45
588	Bridge Relief Joint System	46
589	Elastic Joint Sealer	48
602	Catch Basin, Manhole, Inlet, Drainage Structure, and Valve Vault Construction, Adjustment, and Reconstruction	49
603	Adjusting Frames and Grates of Drainage and Utility Structures	50
606	Concrete Gutter, Curb, Median, and Paved Ditch	52
610	Shoulder Inlets with Curb	53
639	Precast Prestressed Concrete Sight Screen	54
642	Shoulder Rumble Strips	55

RETURN TO AGENDA

643	Impact Attenuators	56
644	High Tension Cable Median Barrier	58
669	Removal and Disposal of Regulated Substances	60
670	Engineer's Field Office and Laboratory	64
701	Work Zone Traffic Control and Protection	65
706	Impact Attenuators, Temporary	68
707	Movable Traffic Barrier	71
708	Temporary Water Filled Barrier	73
730	Wood Sign Support	75
780	Pavement Striping	76
816	Unit Duct	81
836	Pole Foundation	82
860	Master Controller	83
1001	Cement	84
1003	Fine Aggregates	85
1004	Coarse Aggregates	87
1006	Metals	91
1011	Mineral Filler	93
1017	Packaged, Dry, Combined Materials for Mortar	94
1018	Packaged Rapid Hardening Mortar or Concrete	95
1019	Controlled Low-Strength Material (CLSM)	96
1020	Portland Cement Concrete	97
1024	Grout and Nonshrink Grout	136
1030	Hot-Mix Asphalt	137
1040	Drain Pipe, Tile, Drainage Mat, and Wall Drain	142
1042	Precast Concrete Products	143
1069	Pole and Tower	144
1070	Foundation and Breakaway Devices	145
1073	Controller	146
1081	Materials for Planting	147
1082	Preformed Bearing Pads	148
1083	Elastomeric Bearings	149
1088	Wireway and Conduit System	150
1095	Pavement Markings	152
1101	General Equipment	155
1102	Hot-Mix Asphalt Equipment	157
1103	Portland Cement Concrete Equipment	159
1105	Pavement Marking Equipment	160
1106	Work Zone Traffic Control Devices	161

RETURN TO AGENDA

RECURRING SPECIAL PROVISIONS

The following RECURRING SPECIAL PROVISIONS indicated by an "X" are applicable to this contract and are included by reference:

CHECK SHEET #		PAGE NO.
1	Additional State Requirements for Federal-Aid Construction Contracts	163
2	Subletting of Contracts (Federal-Aid Contracts)	166
3	EEO	167
4	Specific EEO Responsibilities Non Federal-Aid Contracts	177
5	Required Provisions - State Contracts	182
6	Asbestos Bearing Pad Removal	188
7	Asbestos Waterproofing Membrane and Asbestos HMA Surface Removal	189
8	Temporary Stream Crossings and In-Stream Work Pads	190
9	Construction Layout Stakes Except for Bridges	191
10 X	Construction Layout Stakes	194
11	Use of Geotextile Fabric for Railroad Crossing	197
12	Subsealing of Concrete Pavements	199
13	Hot-Mix Asphalt Surface Correction	203
14	Pavement and Shoulder Resurfacing	205
15	Reserved	206
16	Patching with Hot-Mix Asphalt Overlay Removal	207
17	Polymer Concrete	208
18	PVC Pipeliner	210
19	Pipe Underdrains	211
20	Guardrail and Barrier Wall Delineation	212
21	Bicycle Racks	216
22	Reserved	218
23	Temporary Portable Bridge Traffic Signals	219
24	Work Zone Public Information Signs	221
25	Nighttime Inspection of Roadway Lighting	222
26	English Substitution of Metric Bolts	223
27	English Substitution of Metric Reinforcement Bars	224
28	Calcium Chloride Accelerator for Portland Cement Concrete	225
29	Reserved	226
30	Quality Control of Concrete Mixtures at the Plant	227
31	Quality Control/Quality Assurance of Concrete Mixtures	235
32	Digital Terrain Modeling for Earthwork Calculations	251
33	Pavement Marking Removal	253
34	Preventive Maintenance – Bituminous Surface Treatment	254
35	Preventive Maintenance – Cape Seal	260
36	Preventive Maintenance – Micro-Surfacing	275
37	Preventive Maintenance – Slurry Seal	286
38	Temporary Raised Pavement Markers	296
39	Restoring Bridge Approach Pavements Using High-Density Foam	297

RETURN TO AGENDA

LOCAL ROADS AND STREETS RECURRING SPECIAL PROVISIONS

Table of Contents

CHECK SHEET #		PAGE NO.
LRS1	Reserved	301
LRS2	Furnished Excavation	302
LRS3	Work Zone Traffic Control Surveillance	303
LRS4	Flaggers in Work Zones	304
LRS5	Contract Claims	305
LRS6 X	Bidding Requirements and Conditions for Contract Proposals	306
LRS7	Bidding Requirements and Conditions for Material Proposals	312
LRS8	Reserved	318
LRS9	Bituminous Surface Treatments	319
LRS10	Reserved	320
LRS11	Employment Practices	321
LRS12 X	Wages of Employees on Public Works	323
LRS13 X	Selection of Labor	325
LRS14	Paving Brick and Concrete Paver Pavements and Sidewalks	326
LRS15	Partial Payments	329
LRS16	Protests on Local Lettings	330
LRS17	Substance Abuse Prevention Program	331
LRS18	Multigrade Cold Mix Asphalt	332

RETURN TO AGENDA

BDE SPECIAL PROVISIONS
For the January 15 and March 4, 2016 Lettings

The following special provisions indicated by an "x" are applicable to this contract and will be included by the Project Development and Implementation Section of the BD&E. An * indicates a new or revised special provision for the letting.

File Name	#		Special Provision Title	Effective	Revised
80240	1		Above Grade Inlet Protection	July 1, 2009	Jan. 1, 2012
80099	2		Accessible Pedestrian Signals (APS)	April 1, 2003	Jan. 1, 2014
* 80274	3		Aggregate Subgrade Improvement	April 1, 2012	Jan. 1, 2016
80192	4		Automated Flagger Assistance Device	Jan. 1, 2008	
80173	5		Bituminous Materials Cost Adjustments	Nov. 2, 2006	July 1, 2015
80241	6		Bridge Demolition Debris	July 1, 2009	
5026I	7		Building Removal-Case I (Non-Friable and Friable Asbestos)	Sept. 1, 1990	April 1, 2010
5048I	8		Building Removal-Case II (Non-Friable Asbestos)	Sept. 1, 1990	April 1, 2010
5049I	9		Building Removal-Case III (Friable Asbestos)	Sept. 1, 1990	April 1, 2010
5053I	10		Building Removal-Case IV (No Asbestos)	Sept. 1, 1990	April 1, 2010
80360	11		Coarse Aggregate Quality	July 1, 2015	
80310	12		Coated Galvanized Steel Conduit	Jan. 1, 2013	Jan. 1, 2015
80341	13		Coilable Nonmetallic Conduit	Aug. 1, 2014	Jan. 1, 2015
80198	14		Completion Date (via calendar days)	April 1, 2008	
80199	15		Completion Date (via calendar days) Plus Working Days	April 1, 2008	
80293	16		Concrete Box Culverts with Skews > 30 Degrees and Design Fills ≤ 5 Feet	April 1, 2012	April 1, 2015
80294	17		Concrete Box Culverts with Skews ≤ 30 Degrees Regardless of Design Fill and Skews > 30 Degrees with Design Fills > 5 Feet	April 1, 2012	April 1, 2014
80311	18		Concrete End Sections for Pipe Culverts	Jan. 1, 2013	
80334	19		Concrete Gutter, Curb, Median, and Paved Ditch	April 1, 2014	Aug. 1, 2014
80277	20		Concrete Mix Design – Department Provided	Jan. 1, 2012	Jan. 1, 2014
80261	21		Construction Air Quality – Diesel Retrofit	June 1, 2010	Nov. 1, 2014
80335	22		Contract Claims	April 1, 2014	
80029	23		Disadvantaged Business Enterprise Participation	Sept. 1, 2000	Jan. 2, 2015
80358	24		Equal Employment Opportunity	April 1, 2015	
80265	25		Friction Aggregate	Jan. 1, 2011	Nov. 1, 2014
80229	26		Fuel Cost Adjustment	April 1, 2009	July 1, 2015
80329	27		Glare Screen	Jan. 1, 2014	
80304	28		Grooving for Recessed Pavement Markings	Nov. 1, 2012	Aug. 1, 2014
80246	29		Hot-Mix Asphalt – Density Testing of Longitudinal Joints	Jan. 1, 2010	April 1, 2012
80322	30		Hot-Mix Asphalt – Mixture Design Composition and Volumetric Requirements	Nov. 1, 2013	Nov. 1, 2014
80323	31		Hot-Mix Asphalt – Mixture Design Verification and Production	Nov. 1, 2013	Nov. 1, 2014
80347	32		Hot-Mix Asphalt – Pay for Performance Using Percent Within Limits – Jobsite Sampling	Nov. 1, 2014	July 1, 2015
80348	33		Hot-Mix Asphalt – Prime Coat	Nov. 1, 2014	
80315	34		Insertion Lining of Culverts	Jan. 1, 2013	Nov. 1, 2013
80351	35		Light Tower	Jan. 1, 2015	
80336	36		Longitudinal Joint and Crack Patching	April 1, 2014	
80324	37		LRFD Pipe Culvert Burial Tables	Nov. 1, 2013	April 1, 2015
80325	38		LRFD Storm Sewer Burial Tables	Nov. 1, 2013	April 1, 2015
80045	39		Material Transfer Device	June 15, 1999	Aug. 1, 2014
80342	40		Mechanical Side Tie Bar Inserter	Aug. 1, 2014	Jan. 1, 2015
80165	41		Moisture Cured Urethane Paint System	Nov. 1, 2006	Jan. 1, 2010
80361	42		Overhead Sign Structures Certification of Metal Fabricator	Nov. 1, 2015	
80337	43		Paved Shoulder Removal	April 1, 2014	

RETURN TO AGENDA

File Name	#		Special Provision Title	Effective	Revised
80349	44		Pavement Marking Blackout Tape	Nov. 1, 2014	
80298	45		Pavement Marking Tape Type IV	April 1, 2012	
80254	46		Pavement Patching	Jan. 1, 2010	
80352	47		Pavement Striping - Symbols	Jan. 1, 2015	
80359	48		Portland Cement Concrete Bridge Deck Curing	April 1, 2015	
80353	49		Portland Cement Concrete Inlay or Overlay	Jan. 1, 2015	April 1, 2015
80338	50		Portland Cement Concrete Partial Depth Hot-Mix Asphalt Patching	April 1, 2014	
80343	51		Precast Concrete Handhole	Aug. 1, 2014	
80300	52		Preformed Plastic Pavement Marking Type D - Inlaid	April 1, 2012	
80328	53		Progress Payments	Nov. 2, 2013	
3426I	54		Railroad Protective Liability Insurance	Dec. 1, 1986	Jan. 1, 2006
80157	55		Railroad Protective Liability Insurance (5 and 10)	Jan. 1, 2006	
80306	56		Reclaimed Asphalt Pavement (RAP) and Reclaimed Asphalt Shingles (RAS)	Nov. 1, 2012	April 1, 2014
80350	57		Retroreflective Sheeting for Highway Signs	Nov. 1, 2014	
80327	58		Reinforcement Bars	Nov. 1, 2013	
80344	59		Rigid Metal Conduit	Aug. 1, 2014	
80354	60		Sidewalk, Corner, or Crosswalk Closure	Jan. 1, 2015	April 1, 2015
80340	61		Speed Display Trailer	April 2, 2014	
80127	62		Steel Cost Adjustment	April 2, 2004	July 1, 2015
* 80362	63		Steel Slag in Trench Backfill	Jan. 1, 2016	
80317	64		Surface Testing of Hot-Mix Asphalt Overlays	Jan. 1, 2013	
80355	65		Temporary Concrete Barrier	Jan. 1, 2015	July 1, 2015
80301	66		Tracking the Use of Pesticides	Aug. 1, 2012	
80356	67		Traffic Barrier Terminals Type 6 or 6B	Jan. 1, 2015	
20338	68		Training Special Provisions	Oct. 15, 1975	
80318	69		Traversable Pipe Grate	Jan. 1, 2013	April 1, 2014
80345	70		Underpass Luminaire	Aug. 1, 2014	April 1, 2015
80357	71		Urban Half Road Closure with Mountable Median	Jan. 1, 2015	July 1, 2015
80346	72		Waterway Obstruction Warning Luminaire	Aug. 1, 2014	April 1, 2015
80288	73		Warm Mix Asphalt	Jan. 1, 2012	Nov. 1, 2014
80302	74		Weekly DBE Trucking Reports	June 2, 2012	April 2, 2015
80289	75		Wet Reflective Thermoplastic Pavement Marking	Jan. 1, 2012	
80071	76	X	Working Days	Jan. 1, 2002	

The following special provisions are in the 2015 Supplemental Specifications and Recurring Special Provisions:

File Name	Special Provision Title	New Location	Effective	Revised
80292	Coarse Aggregate in Bridge Approach Slabs/Footings	Articles 1004.01(b) and 1004.02(f)	April 1, 2012	April 1, 2013
80303	Granular Materials	Articles 1003.04, 1003.04(c), and 1004.05(c)	Nov. 1, 2012	
80330	Pavement Marking for Bike Symbol	Article 780.14	Jan. 1, 2014	
80331	Payrolls and Payroll Records	Recurring CS #1 and #5	Jan. 1, 2014	
80332	Portland Cement Concrete – Curing of Abutments and Piers	Article 1020.13	Jan. 1, 2014	
80326	Portland Cement Concrete Equipment	Article 1103.03(a)(5)	Nov. 1, 2013	
80281	Quality Control/Quality Assurance of Concrete Mixtures	Recurring CS #31	Jan. 1, 2012	Jan. 1, 2014
80283	Removal and Disposal of Regulated Substances	Articles 669.01, 669.08, 669.09, 669.14, and 669.16	Jan. 1, 2012	Nov. 2, 2012
80319	Removal and Disposal of Surplus Materials	Article 202.03	Nov. 2, 2012	
80307	Seeding	Article 250.07	Nov. 1, 2012	
80339	Stabilized Subbase	Article 312.06	April 1, 2014	

RETURN TO AGENDA

File Name	Special Provision Title	New Location	Effective	Revised
80333	Traffic Control Setup and Removal Freeway/Expressway	Articles 701.18(l) and 701.19(a)	Jan. 1, 2014	

The following special provisions require additional information from the designer. The additional information needs to be included in a separate document attached to this check sheet. The Project Development and Implementation section will then include the information in the applicable special provision. The Special Provisions are:

- Bridge Demolition Debris
- Building Removal-Case I
- Building Removal-Case II
- Building Removal-Case III
- Building Removal-Case IV
- Completion Date
- Completion Date Plus Working Days
- DBE Participation
- Material Transfer Device
- Railroad Protective Liability Insurance
- Training Special Provisions
- Working Days

RETURN TO AGENDA

Saint Clair County Prevailing Wage for July 2015

(See explanation of column headings at bottom of wages)

Trade Name	RG	TYP	C	Base	FRMAN	M-F>8	OSA	OSH	H/W	Pensn	Vac	Trng
ASBESTOS ABT-GEN		BLD		29.800	30.300	1.5	1.5	2.0	6.650	11.15	0.000	0.800
ASBESTOS ABT-MEC		BLD		30.360	31.360	1.5	1.5	2.0	7.450	3.000	0.000	0.000
BOILERMAKER		BLD		33.340	35.840	1.5	1.5	2.0	7.070	21.53	1.250	0.400
BRICK MASON		BLD		32.000	33.920	1.5	1.5	2.0	8.100	10.92	0.000	0.800
CARPENTER		ALL		36.340	37.840	1.5	1.5	2.0	6.800	8.250	0.000	0.400
CEMENT MASON		ALL		32.000	33.000	1.5	1.5	2.0	9.750	12.75	0.000	0.200
CERAMIC TILE FNSHER		BLD		27.480	0.000	1.5	1.5	2.0	6.450	5.700	0.000	0.580
ELECTRIC PWR EQMT OP		ALL		39.670	47.820	1.5	1.5	2.0	6.950	11.12	0.000	0.400
ELECTRIC PWR GRNDMAN		ALL		29.620	47.820	1.5	1.5	2.0	5.190	8.300	0.000	0.290
ELECTRIC PWR LINEMAN		ALL		45.610	47.820	1.5	1.5	2.0	7.990	12.78	0.000	0.450
ELECTRIC PWR TRK DRV		ALL		32.380	47.820	1.5	1.5	2.0	5.670	9.080	0.000	0.320
ELECTRICIAN		ALL		38.450	40.760	1.5	1.5	2.0	7.990	9.720	0.000	0.960
ELECTRONIC SYS TECH		BLD		32.150	34.150	1.5	1.5	2.0	3.650	8.210	0.000	0.400
ELEVATOR CONSTRUCTOR		BLD		45.090	50.730	2.0	2.0	2.0	13.57	14.21	3.610	0.600
FLOOR LAYER		BLD		31.080	31.830	1.5	1.5	2.0	6.800	8.250	0.000	0.400
GLAZIER		BLD		32.780	0.000	2.0	2.0	2.0	9.020	10.80	2.630	0.310
HT/FROST INSULATOR		BLD		38.060	39.060	1.5	1.5	2.0	8.700	11.46	0.000	0.550
IRON WORKER		ALL		31.500	33.500	1.5	1.5	2.0	8.610	14.45	0.000	0.420
LABORER	N	ALL		29.900	30.900	1.5	1.5	2.0	7.100	11.40	0.000	0.800
LABORER	S	ALL		27.920	28.920	1.5	1.5	2.0	6.350	14.13	0.000	0.800
MACHINIST		BLD		45.350	47.850	1.5	1.5	2.0	7.260	8.950	1.850	0.000
MARBLE FINISHERS		BLD		27.480	0.000	1.5	1.5	2.0	6.450	5.700	0.000	0.580
MARBLE MASON		BLD		32.000	33.920	1.5	1.5	2.0	8.100	10.92	0.000	0.800
MILLWRIGHT		ALL		36.340	37.840	1.5	1.5	2.0	6.800	8.250	0.000	0.400
OPERATING ENGINEER		BLD	1	34.700	37.700	1.5	1.5	2.0	10.00	17.20	0.000	1.000
OPERATING ENGINEER		BLD	2	33.570	37.700	1.5	1.5	2.0	10.00	17.20	0.000	1.000
OPERATING ENGINEER		BLD	3	29.090	37.700	1.5	1.5	2.0	10.00	17.20	0.000	1.000
OPERATING ENGINEER		BLD	4	29.150	37.700	1.5	1.5	2.0	10.00	17.20	0.000	1.000
OPERATING ENGINEER		BLD	5	28.820	37.700	1.5	1.5	2.0	10.00	17.20	0.000	1.000
OPERATING ENGINEER		BLD	6	36.250	37.700	1.5	1.5	2.0	10.00	17.20	0.000	1.000
OPERATING ENGINEER		BLD	7	36.550	37.700	1.5	1.5	2.0	10.00	17.20	0.000	1.000
OPERATING ENGINEER		BLD	8	36.830	37.700	1.5	1.5	2.0	10.00	17.20	0.000	1.000
OPERATING ENGINEER		BLD	9	35.700	37.700	1.5	1.5	2.0	10.00	17.20	0.000	1.000
OPERATING ENGINEER		HWY	1	33.700	36.700	1.5	1.5	2.0	11.00	17.35	0.000	1.000
OPERATING ENGINEER		HWY	2	32.570	36.700	1.5	1.5	2.0	11.00	17.35	0.000	1.000
OPERATING ENGINEER		HWY	3	28.090	36.700	1.5	1.5	2.0	11.00	17.35	0.000	1.000
OPERATING ENGINEER		HWY	4	28.150	36.700	1.5	1.5	2.0	11.00	17.35	0.000	1.000
OPERATING ENGINEER		HWY	5	27.820	36.700	1.5	1.5	2.0	11.00	17.35	0.000	1.000
OPERATING ENGINEER		HWY	6	35.250	36.700	1.5	1.5	2.0	11.00	17.35	0.000	1.000
OPERATING ENGINEER		HWY	7	35.550	36.700	1.5	1.5	2.0	11.00	17.35	0.000	1.000
OPERATING ENGINEER		HWY	8	35.830	36.700	1.5	1.5	2.0	11.00	17.35	0.000	1.000
OPERATING ENGINEER		HWY	9	34.700	36.700	1.5	1.5	2.0	11.00	17.35	0.000	1.000
PAINTER		BLD		30.250	31.750	1.5	2.0	2.0	5.250	9.170	0.000	0.650
PAINTER		HWY		31.450	32.950	1.5	1.5	2.0	5.250	9.170	0.000	0.650
PAINTER OVER 30FT		BLD		31.250	32.750	1.5	2.0	2.0	5.250	9.170	0.000	0.650
PAINTER PWR EQMT		BLD		31.250	32.750	1.5	2.0	2.0	5.250	9.170	0.000	0.650
PAINTER PWR EQMT		HWY		32.450	33.950	1.5	1.5	2.0	5.250	9.170	0.000	0.650
PILEDRIVER		ALL		36.340	37.840	1.5	1.5	2.0	6.800	8.250	0.000	0.400
PIPEFITTER	NW	BLD		37.250	39.250	1.5	1.5	2.0	6.740	8.000	0.000	0.750
PIPEFITTER	SE	BLD		37.000	39.500	1.5	1.5	2.0	8.550	5.700	0.000	0.580
PLASTERER		BLD		30.500	31.000	1.5	1.5	2.0	9.750	9.150	0.000	0.050
PLUMBER	NW	BLD		37.750	40.250	1.5	1.5	2.0	6.750	6.850	0.000	0.550
PLUMBER	SE	BLD		37.000	39.500	1.5	1.5	2.0	8.550	5.700	0.000	0.580
ROOFER		BLD		30.700	32.700	1.5	1.5	2.0	8.900	7.450	0.000	0.290
SHEETMETAL WORKER		ALL		32.650	34.150	1.5	1.5	2.0	8.630	7.670	1.970	0.360
SPRINKLER FITTER		BLD		40.030	43.030	2.0	2.0	2.0	8.370	11.18	0.000	1.250
~~SURVEY WORKER~~	->NOT IN EFFECT	N	ALL	29.300	29.800	1.5	1.5	2.0	6.050	10.60	0.000	0.800
~~SURVEY WORKER~~	->NOT IN EFFECT	S	ALL	27.620	28.120	1.5	1.5	2.0	5.750	12.58	0.000	0.800
TERRAZZO FINISHER		BLD		31.240	0.000	1.5	1.5	2.0	6.450	4.370	0.000	0.420
TERRAZZO MASON		BLD		32.530	32.830	1.5	1.5	2.0	6.450	5.870	0.000	0.450
TRUCK DRIVER		ALL	1	34.220	37.870	1.5	1.5	2.0	11.40	5.640	0.000	0.250
TRUCK DRIVER		ALL	2	34.690	37.870	1.5	1.5	2.0	11.40	5.640	0.000	0.250
TRUCK DRIVER		ALL	3	34.950	37.870	1.5	1.5	2.0	11.40	5.640	0.000	0.250
TRUCK DRIVER		ALL	4	35.240	37.870	1.5	1.5	2.0	11.40	5.640	0.000	0.250

TRUCK DRIVER	ALL	5	36.170	37.870	1.5	1.5	2.0	11.40	5.640	0.000	0.250
TRUCK DRIVER	O&C	1	27.380	30.300	1.5	1.5	2.0	11.40	5.640	0.000	0.250
TRUCK DRIVER	O&C	2	27.750	30.300	1.5	1.5	2.0	11.40	5.640	0.000	0.250
TRUCK DRIVER	O&C	3	27.960	30.300	1.5	1.5	2.0	11.40	5.640	0.000	0.250
TRUCK DRIVER	O&C	4	28.190	30.300	1.5	1.5	2.0	11.40	5.640	0.000	0.250
TRUCK DRIVER	O&C	5	28.940	30.300	1.5	1.5	2.0	11.40	5.640	0.000	0.250

Legend:
- RG (Region)
- TYP (Trade Type - All,Highway,Building,Floating,Oil & Chip,Rivers)
- C (Class)
- Base (Base Wage Rate)
- FRMAN (Foreman Rate)
- M-F>8 (OT required for any hour greater than 8 worked each day, Mon through Fri.
- OSA (Overtime (OT) is required for every hour worked on Saturday)
- OSH (Overtime is required for every hour worked on Sunday and Holidays)
- H/W (Health & Welfare Insurance)
- Pensn (Pension)
- Vac (Vacation)
- Trng (Training)

RETURN TO AGENDA

Explanations

ST. CLAIR COUNTY

LABORERS (NORTH) - The area bounded by Route 159 to a point south of Fairview Heights and west-southwest to Route 3 at Monroe County line.

PLUMBERS & PIPEFITTERS (SOUTHEAST) - That part of the county bordered by Rt. 50 on the North and West including Belleville.

PLUMBERS (NORTHWEST) - Towns of Aloraton, Brooklyn, Cahokia, Caseyville, Centreville, Dupo, East Carondelet, E. St. Louis, Fairview Heights, French Village, National City, O'Fallon, Sauget, and Washington Park.

The following list is considered as those days for which holiday rates of wages for work performed apply: New Years Day, Memorial Day, Fourth of July, Labor Day, Thanksgiving Day, Christmas Day and Veterans Day in some classifications/counties. Generally, any of these holidays which fall on a Sunday is celebrated on the following Monday. This then makes work performed on that Monday payable at the appropriate overtime rate for holiday pay. Common practice in a given local may alter certain days of celebration. If in doubt, please check with IDOL.

Oil and chip resealing (O&C) means the application of road oils and liquid asphalt to coat an existing road surface, followed by application of aggregate chips or gravel to coated surface, and subsequent rolling of material to seal the surface.

EXPLANATION OF CLASSES

ASBESTOS - GENERAL - removal of asbestos material/mold and hazardous materials from any place in a building, including mechanical systems where those mechanical systems are to be removed. This includes the removal of asbestos materials/mold and hazardous materials from ductwork or pipes in a building when the building is to be demolished at the time or at some close future date.

ASBESTOS - MECHANICAL - removal of asbestos material from mechanical systems, such as pipes, ducts, and boilers, where the mechanical systems are to remain.

CERAMIC TILE FINISHER AND MARBLE FINISHER

The handling, at the building site, of all sand, cement, tile, marble or stone and all other materials that may be used and installed by [a] tile layer or marble mason. In addition, the grouting, cleaning, sealing, and mixing on the job site, and all other work as required in assisting the setter. The term "Ceramic" is used for naming the

RETURN TO AGENDA

classification only and is in no way a limitation of the product handled. Ceramic takes into consideration most hard tiles.

ELECTRONIC SYSTEMS TECHNICIAN

Installation, service and maintenance of low-voltage systems which utilizes the transmission and/or transference of voice, sound, vision, or digital for commercial, education, security and entertainment purposes for the following: TV monitoring and surveillance, background/foreground music, intercom and telephone interconnect, field programming, inventory control systems, microwave transmission, multi-media, multiplex, radio page, school, intercom and sound burglar alarms and low voltage master clock systems.

Excluded from this classification are energy management systems, life safety systems, supervisory controls and data acquisition systems not intrinsic with the above listed systems, fire alarm systems, nurse call systems and raceways exceeding fifteen feet in length.

OPERATING ENGINEER - BUILDING

GROUP I. Cranes, Dragline, Shovels, Skimmer Scoops, Clamshells or Derrick Boats, Pile Drivers, Crane-Type Backhoes, Asphalt Plant Operators, Concrete Plant Operators, Dredges, Asphalt Spreading Machines, All Locomotives, Cable Ways or Tower Machines, Hoists, Hydraulic Backhoes, Ditching Machines or Backfiller, Cherrypickers, Overhead Cranes, Roller - Steam or Gas, Concrete Pavers, Excavators, Concrete Breakers, Concrete Pumps, Bulk Cement Plants, Cement Pumps, Derrick-Type Drills, Boat Operators, Motor Graders or Pushcats, Scoops or Tournapulls, Bulldozers, Endloaders or Fork Lifts, Power Blade or Elevating Graders, Winch Cats, Boom or Winch Trucks or Boom Tractors, Pipe Wrapping or Painting Machines, Asphalt Plant Engineer, Journeyman Lubricating Engineer, Drills (other than Derrick Type), Mud Jacks, or Well Drilling Machines, Boring Machines or Track Jacks, Mixers, Conveyors (Two), Air Compressors (Two), Water Pumps regardless of size (Two), Welding Machines (Two), Siphons or Jets (Two), Winch Heads or Apparatuses (Two), Light Plants (Two), All Tractors regardless of size (straight tractor only), Fireman on Stationary Boilers, Automatic Elevators, Form Grading Machines, Finishing Machines, Power Sub-Grader or Ribbon Machines, Longitudinal Floats, Distributor Operators on Trucks, Winch Heads or Apparatuses (One), Mobil Track air and heaters (two to five), Heavy Equipment Greaser, Relief Operator, Assistant Master Mechanic and Heavy Duty Mechanic, self-propelled concrete saws of all types and sizes with their attachments, gob-hoppers, excavators all sizes, the repair and greasing of all diesel hammers, the operation and set-up of bidwells, water blasters of all sizes and their clutches, hydraulic jacks where used for hoisting, operation of log skidders, iceolators used on and off of pipeline, condor cranes, bow boats, survey boats, bobcats and all their attachments, skid steer loaders and all their attachments, creter cranes, batch plants, operator (all sizes), self propelled roto mills, operation of conveyor systems of any size and any configuration, operation, repair and service of all vibratory hammers, all power pacs and their controls regardless of location, curtains or brush burning machines, stump cutter machines, Nail launchers when mounted on a machine or self-propelled, operation of con-cover machines, and all Operators except those listed below).

GROUP II. Assistant Operators.

GROUP III. Air Compressors (One), Water Pumps, regardless of Size (One), Waterblasters (one), Welding Machine (One), Mixers (One Bag), Conveyor (One), Siphon or Jet (One), Light Plant (One), Heater (One), Immobile Track Air (One), and Self Propelled Walk-Behind Rollers.

GROUP IV. Asphalt Spreader Oilers, Fireman on Whirlies and Heavy Equipment Oilers, Truck Cranes, Dredges, Monigans, Large Cranes - (Over 65-ton rated capacity) Concrete Plant Oiler, Blacktop Plant Oiler, and Creter Crane Oiler (when required).

RETURN TO AGENDA

GROUP V. Oiler.

GROUP VI. Operators on equipment with Booms,including jibs, 100 feet and over, and less than 150 feet long.

GROUP VII. Operators on equipment with Booms, including jibs, 150 feet and over, and less than 200 feet long.

GROUP VIII. Operators on Equipment with Booms, including jibs, 200 feet and over; Tower Cranes; and Whirlie Cranes.

GROUP IX. Master Mechanic

OPERATING ENGINEERS - Highway

GROUP I. Cranes, Dragline, Shovels, Skimmer Scoops, Clamshells or Derrick Boats, Pile Drivers, Crane-Type Backhoes, Asphalt Plant Operators, Concrete Plant Operators, Dredges, Asphalt Spreading Machines, All Locomotives, Cable Ways or Tower Machines, Hoists, Hydraulic Backhoes, Ditching Machines or Backfiller, Cherrypickers, Overhead Cranes, Roller - Steam or Gas, Concrete Pavers, Excavators, Concrete Breakers, Concrete Pumps, Bulk Cement Plants, Cement Pumps, Derrick-Type Drills, Boat Operators, Motor Graders or Pushcats, Scoops or Tournapulls, Bulldozers, Endloaders or Fork Lifts, Power Blade or Elevating Graders, Winch Cats, Boom or Winch Trucks or Boom Tractors, Pipe Wrapping or Painting Machines, Asphalt Plant Engineer, Journeyman Lubricating Engineer, Drills (other than Derrick Type), Mud Jacks, Well Drilling Machines, Boring Machines, Track Jacks, Mixers, Conveyors (Two), Air Compressors (Two), Water Pumps regardless of size (Two), Welding Machines (Two), Siphons or Jets (Two), Winch Heads or Apparatuses (Two), Light Plants (Two), All Tractors regardless of size (straight tractor only), Fireman on Stationary Boilers, Automatic Elevators, Form Grading Machines, Finishing Machines, Power Sub-Grader or Ribbon Machines, Longitudinal Floats, Distributor Operators on Trucks, Winch Heads or Apparatuses (One), Mobil Track air and heaters (two to five), Heavy Equipment Greaser, Relief Operator, Assistant Master Mechanic and Heavy Duty Mechanic, self-propelled concrete saws of all types and sizes with their attachments, gob-hoppers, excavators all sizes, the repair and greasing of all diesel hammers, the operation and set-up of bidwells, water blasters of all sizes and their clutches, hydraulic jacks where used for hoisting, operation of log skidders, iceolators used on and off of pipeline, condor cranes, bow boats, survey boats, bobcats and all their attachments, skid steer loaders and all their attachments, creter cranes, batch plants, operator (all sizes), self propelled roto mills, operation of conveyor systems of any size and any configuration, operation, repair and service of all vibratory hammers, all power pacs and their controls regardless of location, curtains or brush burning machines, stump cutter machines, Nail launchers when mounted on a machine or self-propelled, operation of con-cover machines, and all Operators (except those listed below).

GROUP II. Assistant Operators.

GROUP III. Air Compressors (One), Water Pumps, regardless of Size (One), Waterblasters (one), Welding Machine (One), Mixers (One Bag), Conveyor (One), Siphon or Jet (One), Light Plant (One), Heater (One), Immobile Track Air (One), and Self Propelled Walk-Behind Rollers.

GROUP IV. Asphalt Spreader Oilers, Fireman on Whirlies and Heavy Equipment Oilers, Truck Cranes, Dredges, Monigans, Large Cranes - (Over 65-ton rated capacity) Concrete Plant Oiler, Blacktop Plant Oiler, and Creter Crane Oiler (when required).

GROUP V. Oiler.

GROUP VI. Operators on equipment with Booms, including jibs, 100 feet and over, and less than 150 feet long.

GROUP VII. Operators on equipment with Booms, including jibs, 150 feet and over, and less than 200 feet long.

RETURN TO AGENDA

GROUP VIII. Operators on Equipment with Booms, including jibs, 200 feet and over; Tower Cranes; and Whirlie Cranes.

GROUP IX. Mechanic

SURVEY WORKER - Operated survey equipment including data collectors, G.P.S. and robotic instruments, as well as conventional levels and transits.

TRUCK DRIVER - BUILDING, HEAVY AND HIGHWAY CONSTRUCTION
Class 1. Drivers on 2 axle trucks hauling less than 9 ton. Air compressor and welding machines and brooms, including those pulled by separate units, truck driver helpers, warehouse employees, mechanic helpers, greasers and tiremen, pickup trucks when hauling materials, tools, or workers to and from and on-the-job site, and fork lifts up to 6,000 lb. capacity.

Class 2. Two or three axle trucks hauling more than 9 ton but hauling less than 16 ton. A-frame winch trucks, hydrolift trucks, vactor trucks or similar equipment when used for transportation purposes. Fork lifts over 6,000 lb. capacity, winch trucks, four axle combination units, and ticket writers.

Class 3. Two, three or four axle trucks hauling 16 ton or more. Drivers on water pulls, articulated dump trucks, mechanics and working forepersons, and dispatchers. Five axle or more combination units.

Class 4. Low Boy and Oil Distributors.

Class 5. Drivers who require special protective clothing while employed on hazardous waste work.
TRUCK DRIVER - OIL AND CHIP RESEALING ONLY.

This shall encompass laborers, workers and mechanics who drive contractor or subcontractor owned, leased, or hired pickup, dump, service, or oil distributor trucks. The work includes transporting materials and equipment (including but not limited to, oils, aggregate supplies, parts, machinery and tools) to or from the job site; distributing oil or liquid asphalt and aggregate; stock piling material when in connection with the actual oil and chip contract. The Truck Driver (Oil & Chip Resealing) wage classification does not include supplier delivered materials.

TERRAZZO FINISHER

The handling of all materials used for Mosaic and Terrazzo work including preparing, mixing by hand, by mixing machine or transporting of pre-mixed materials and distributing with shovel, rake, hoe, or pail, all kinds of concrete foundations necessary for Mosaic and Terrazzo work, all cement terrazzo, magnesite terrazzo, Do-O-Tex terrazzo, epoxy matrix ter-razzo, exposed aggregate, rustic or rough washed for exterior or interior of buildings placed either by machine or by hand, and any other kind of mixture of plastics composed of chips or granules when mixed with cement, rubber, neoprene, vinyl, magnesium chloride or any other resinous or chemical substances used for seamless flooring systems, and all other building materials, all similar materials and all precast terrazzo work on jobs, all scratch coat used for Mosaic and Terrazzo work and sub-bed, tar paper and wire mesh (2x2 etc.) or lath. The rubbing, grinding, cleaning and finishing of same either by hand or by machine or by terrazzo resurfacing equipment on new or existing floors. When necessary finishers shall be allowed to assist the mechanics to spread sand bed, lay tarpaper and wire mesh (2x2 etc.) or lath. The finishing of cement floors where additional aggregate of stone is added by spreading or sprinkling on top of the finished base, and troweled or rolled into the finish and then the surface is ground by grinding machines.

RETURN TO AGENDA

Other Classifications of Work:

For definitions of classifications not otherwise set out, the Department generally has on file such definitions which are available. If a task to be performed is not subject to one of the classifications of pay set out, the Department will upon being contacted state which neighboring county has such a classification and provide such rate, such rate being deemed to exist by reference in this document. If no neighboring county rate applies to the task, the Department shall undertake a special determination, such special determination being then deemed to have existed under this determination. If a project requires these, or any classification not listed, please contact IDOL at 217-782-1710 for wage rates or clarifications.

LANDSCAPING

Landscaping work falls under the existing classifications for laborer, operating engineer and truck driver. The work performed by landscape plantsman and landscape laborer is covered by the existing classification of laborer. The work performed by landscape operators (regardless of equipment used or its size) is covered by the classifications of operating engineer. The work performed by landscape truck drivers (regardless of size of truck driven) is covered by the classifications of truck driver.

RETURN TO AGENDA

WORKING DAYS (BDE)

Effective: January 1, 2002

The Contractor shall complete the work within 45 working days.

80071

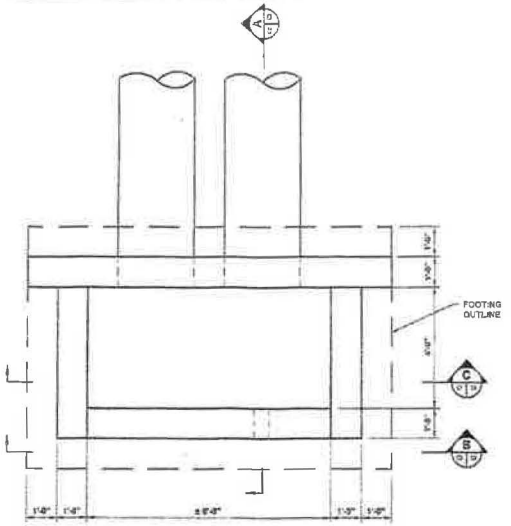

SOUTH BASIN OUTLET STRUCTURE PLAN

SCALE: 1/2"=1'-0"

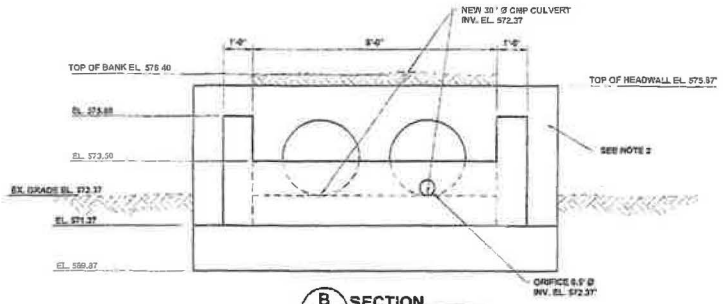

B SECTION

C2 C2 SCALE: 1/2"=1'-0"

NOTES:

1. CONTRACTOR TO FIELD VERIFY DIMENSIONS OF EXISTING GRADE, TOP ELEVATION, AND SLOPE.
2. BACKFILL AROUND OUTLET STRUCTURE TO PROMOTE DRAINAGE INTO BASIN. BACKFILL TO 6" FROM TOP OF STRUCTURE SIDE-WALLS.
3. CONTRACTOR TO SEED DISTURBED EARTH PER SECTION 250 OF THE IDOT STANDARD SPECIFICATIONS FOR ROAD AND BRIDGE CONSTRUCTION.
4. FILTER FABRIC PER SECTION 252 AND 1080.03 OF IDOT STANDARD SPECIFICATIONS FOR ROAD AND BRIDGE CONSTRUCTIONS.
5. NEW BASIN OUTLET STRUCTURE TO CONFORM TO SECTION 602 OF IDOT STANDARD SPECIFICATIONS FOR ROAD AND BRIDGE CONSTRUCTION AS MODIFIED BY THE DETAILS SHOWN ON SHEET S1.
6. FILL STRUCTURE TO EL. 572.37' WITH CONTROLLED LOW-STRENGTH MATERIAL, PER SECTION 593-CONTROLLED LOW-STRENGTH MATERIAL. BACKFILL OF IDOT STANDARD SPECIFICATIONS FOR ROAD AND BRIDGE CONSTRUCTION
7. PLACE RIPRAP AT END OF PIPE SECTION AND AT ENTRANCE OF OUTLET STRUCTURE. WIDTH OF RIPRAP SHALL EXTEND 15' FROM CENTERLINE OF EACH CMP SECTION AND SHALL CONFORM TO IDOT GRADATION NO RR-5.
8. WHEN SPRINGLINE OF NEW 30" CMP SECTION BECOMES HIGHER THAN SURROUNDING GRADE, FILL ANNULUS BETWEEN THE PARALLEL PIPE SECTIONS TO THE CULVERTS' SPRINGLINE

2' 0' 2' 4'

SCALE: 1/2" = 1'-0"

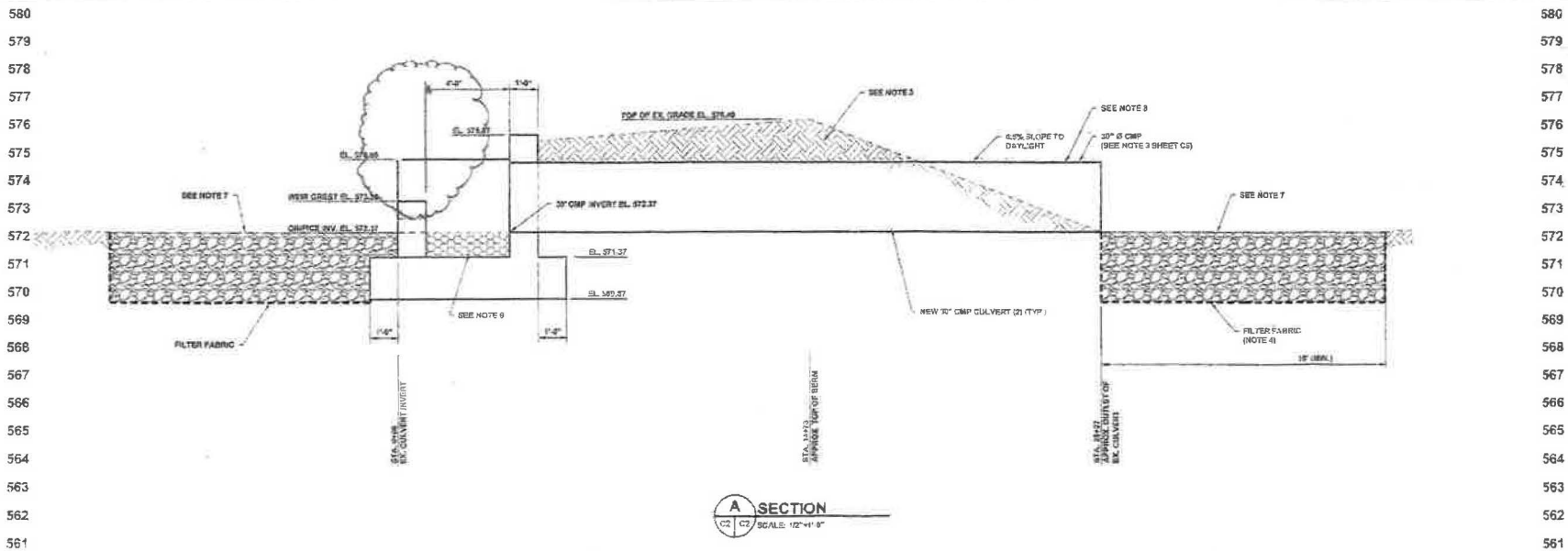

A SECTION

C2 C2 SCALE: 1/2"=1'-0"

NO	DATE	REVISION
0	01/15/16	ISSUED FOR BID

HORNER SHIFRIN

401 S. 18TH ST., STE. 400 SAINT LOUIS, MO 63103-2296
314-231-1021 • FAX 314-231-1028 • WWW.HORNERSHIFRIN.COM
DESIGN FIRM LICENSE NUMBER: 184-001128
CERTIFICATE OF AUTHORITY: 000158
EXPIRATION DATE: DECEMBER 31, 2016

CITY OF FAIRVIEW HEIGHTS
ST. CLAIR COUNTY, ILLINOIS
FOX CREEK SUBDIVISION
STORM WATER IMPROVEMENTS

SOUTH BASIN OUTLET STRUCTURE DETAILS

DATE 01/15/16

DESIGNED SJF
DRAWN: KAS
CHECKED: SR

HS JOB NO. 1520000

SHEET 4 OF 8

C2

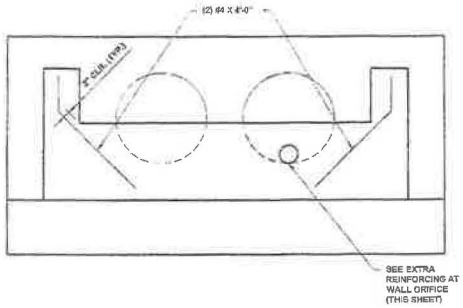

SOUTH BASIN OUTLET STRUCTURE

SCALE: N.T.S.

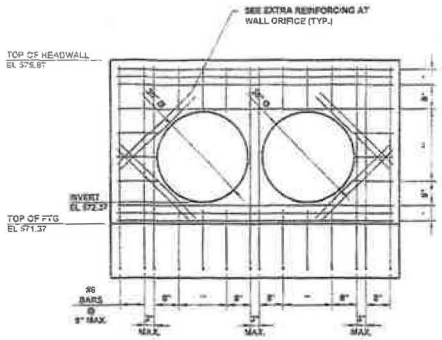

A SECTION

S1 | S1 SCALE: N.T.S.

* 3 - #6 BARS @ 3 1/2" CTS (EACH FACE)
** FIELD CUT #6 BARS @ 8" MAX. SPACING (EACH FACE)

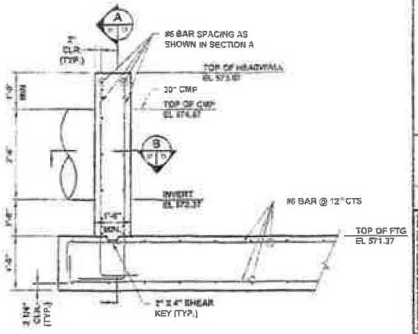

BASIN HEAD WALL

SCALE: N.T.S.

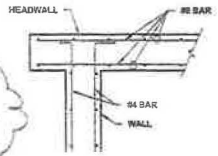

B SECTION

S1 | S1 SCALE: N.T.S.

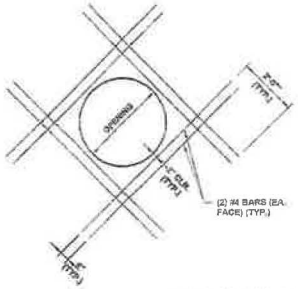

EXTRA REINFORCING AT WALL ORIFICE

SCALE: N.T.S.

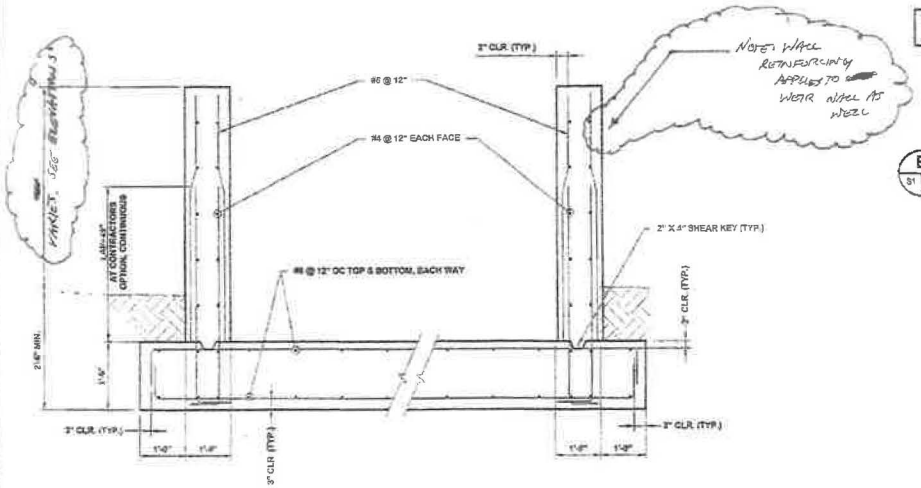

C BASIN WALLS OUTLET STRUCTURE

S1 | 1 SCALE: N.T.S.

NOTES:
1. CONCRETE = 4500PSI WITH 6% +/- % AIR.
2. REINFORCING STEEL IS ASTM A615 GRADE 60.
3. PROVIDE #4 CORNER BARS PER TYPICAL DETAIL

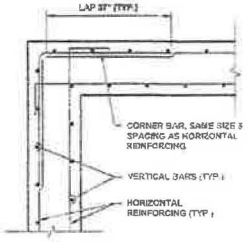

WALL CORNER BAR DETAIL

SCALE: N.T.S.

SCALE: 3/4" = 1'-0"

NO	DATE	REVISION
C	11/13/15	ISSUE SUBMITTAL FOR CITY REVIEW
B	10/05/15	ISSUE SUBMITTAL FOR CITY REVIEW
A	08/26/15	ISSUE SUBMITTAL FOR CITY REVIEW

HORNER SHIFRIN
401 S. 18TH ST., STE. 400 SAINT LOUIS, MO 63103-2296
314-231-4334 FAX 314-231-1775 WWW.HORNERSHIFRIN.COM
DISCIPLINE: PROFESSIONAL ENGINEERING
CERTIFICATE OF AUTHORITY: 000150
EXPIRATION DATE: DECEMBER 31, 2016

CITY OF FAIRVIEW HEIGHTS
ST. CLAIR COUNTY, ILLINOIS
FOX CREEK SUBDIVISION
STORM WATER IMPROVEMENTS

SOUTH BASIN STRUCTURAL DETAILS

DATE: 01/15/16
DESIGNED: MCL
DRAWN: KAS
CHECKED: SR
HS JOB NO. 1520000
SHEET 8 OF 8

S1

PROPOSED RESOLUTION NO. 37-'16

RETURN TO AGENDA

A RESOLUTION AUTHORIZING THE MAYOR TO ENTER INTO A RIGHT-OF-WAY AGREEMENT FOR THE INSTALLATION OF TELECOMMUNICATIONS EQUIPMENT WITHIN, OVER OR UNDER THE CITY'S RIGHT-OF-WAY AND A DARK FIBER LICENSE AGREEMENT FOR THE RESERVATION OF TWO DARK FIBER STRANDS IN THE FIBER OPTIC CABLE FOR USE BY THE CITY WITH EXTENET SYSTEMS, INC.

WHEREAS, ExteNet Systems, Inc. requests access to the City's right-of-way to attach, install, operate, maintain, remove, reattach, reinstall, relocate, and replace telecommunication equipment in or on utility infrastructure located within the City's right-of-way; and

WHEREAS, the City of Fairview Heights and ExteNet Systems, Inc. have negotiated a Telecommunications Attachment and Rights-of-Way Agreement granting access to the City's right-of-way for installation of telecommunications equipment within, over or under the City's right-of-way; and

WHEREAS, ExteNet Systems, Inc. will reserve two dark fiber strands in ExteNet's fiber optic cable for the exclusive use of the City as required by the City in connection with the implementation of the network installation in the City's right-of-way.

WHEREAS, the City of Fairview Heights and ExteNet Systems, Inc. have negotiated a Dark Fiber License Agreement reserving two dark fiber strands in the ExteNet's fiber optic cable for the exclusive use by the City.

NOW, THEREFORE, BE IT RESOLVED BY THE CITY COUNCIL OF THE CITY OF FAIRVIEW HEIGHTS:

That the Mayor be and is hereby authorized to enter into, on behalf of the City, a Telecommunications Attachment and Rights-of-Way Agreement, for access to the City's right-of-way for installation of telecommunications equipment within, over or under the City's right-of-way for the fees outlined in Exhibit B of the Telecommunications Attachment and Rights-of-Way Agreement, pursuant to the Telecommunications Attachment and Rights-of-Way Agreement attached hereto, made a part hereof, and marked "Exhibit A"; and a Dark Fiber License Agreement, for the reservation of two dark

RETURN TO AGENDA

fiber strands in ExteNet's fiber optic cable, pursuant to the Dark Fiber License Agreement attached hereto, made a part hereof, and marked "Exhibit B" with ExteNet Systems, Inc., 3030 Warrenville Road, Suite 340, Lisle, Illinois 60532.

This Resolution shall be in full force and effect from and after its passage and approval as provided by law.

PASSED:

APPROVED:

_____
MARK T. KUPSKY - MAYOR
CITY OF FAIRVIEW HEIGHTS

ATTEST:

_____
KAREN J. KAUFHOLD - CITY CLERK

"EXHIBIT A"

RETURN TO AGENDA

TELECOMMUNICATIONS ATTACHMENT AND RIGHTS-OF-WAY AGREEMENT

between

The CITY of Fairview Heights, Illinois

and

EXTENET SYSTEMS, INC.

RETURN TO AGENDA

TELECOMMUNICATIONS ATTACHMENT AND RIGHTS-OF-WAY AGREEMENT

The CITY of Fairview Heights, IL ("CITY"), and EXTENET SYSTEMS, INC., a corporation organized and existing under the laws of Delaware ("ExteNet"), hereby enter into this Telecommunications Attachment and Rights-of-Way Agreement ("Agreement") effective as of _____, 2014, (the "Effective Date").

WHEREAS ExteNet has been issued a certificate of public convenience and necessity by the PUC/PSC as a provider of telecommunications services with authority to operate throughout the State of Illinois; and

WHEREAS CITY is required by federal and State statutes, regulations and orders to grant all telecommunications service providers access to and occupancy of the public rights-of-way in CITY on a non-discriminatory basis for the purpose of installing facilities to provide telecommunications services; and

WHEREAS the jurisdictional boundaries of CITY include public rights-of-way and facilities that are used by, and useful to, telecommunications providers; and

WHEREAS CITY is authorized by State statutes, regulations and orders to recover just and reasonable costs for administering telecommunications providers' access to the public rights-of-way within CITY's jurisdictional boundaries.

NOW THEREFORE, in consideration of the promises and mutual covenants herein contained the CITY and ExteNet, for valuable consideration, the receipt and sufficiency of which are hereby acknowledged, hereby agree as follows:

1. Definitions

Except as the context may otherwise require, each capitalized word or phrase in this Agreement shall have the meaning specified herein. All other terms in this Agreement shall be interpreted in accord with common usage in the telecommunications industry. Without limiting the generality of the foregoing, for purposes of this Agreement, the terms listed below are defined as follows:

1.1. "Attachment" means the placement, attachment or installation of one or more items of Equipment on, over, under or within any CITY ROW or to any CITY Facility.

1.2. "Commission" or "PUC/PSC" means the State of Illinois Commerce Commission.

1.3. "Equipment" means any and all radios, amplifiers, optical converters, multiplexers, antennae, cables, wires, conduits, innerducts, pedestals, boxes, cabinets, primary and auxiliary power supplies, power meters, support structures,

mounting hardware, and all related or ancillary devices installed, operated or used by ExteNet to provide Service.

1.4. "ExteNet" shall mean ExteNet Systems, Inc., a corporation organized under the laws of State of Delaware and to which the Commission has issued a certificate to operate as a provider of telecommunications services.

1.5."Fee" means any one-time amount to be paid by ExteNet pursuant to this Agreement. Without limiting the generality of the foregoing. "Attachment Fees" means Fees paid in consideration of Attachments to Facilities, and "ROW Fees" means Fees paid to cover the reasonable costs for CITY to administer access to its ROW.

1.6. "Facility" or "Facilities" means any CITY-owned or leased structure upon or within which it is technically feasible to place Equipment, including, but not limited to any CITY -owned light poles or fixtures, traffic signal poles, or conduit in CITY Rights-of-Way.

1.7."Network" means the various Node Poles and other Attachments used by ExteNet to provide Services.

1.8. "Node Poles" means those utility poles or Facilities to which ExteNet proposes to attach items of Equipment, other than wires and fiber optic cabling, as illustrated in Exhibit A.

1.9. "Pole Placement" means the placement of a new wooden, metal or concrete pole or other vertical structure in CITY ROW when necessary or useful for ExteNet's provision of Service. "Pole Placement" does not include replacement of existing Utility Infrastructure poles.

1.10. "Restore" means returning a CITY Facility or ROW to the condition it was in prior to Attachment, excepting reasonable wear and tear.

1.11. "Rights-of-Way" or "ROW" means the public ways and other areas now or hereafter existing that are owned by or otherwise subject to the jurisdiction and control of CITY , including without limitation, all space in, upon, above, along, across, under, and over any or all of the following: highways, streets, roads, lanes, courts, ways, alleys, boulevards, paths, curbs, sidewalks, bridges, overpasses, underpasses, tunnels, parks, parkways, waterways, easements, conduit, vaults, access manholes and "handholes".

1.12. "Service" means the transport, transmission and reception of signals carrying voice and data communications, including but not limited to format and/or protocol conversion and point-to-point transport of signals over fiber optic cables and other wireline connections as ExteNet provides as authorized by the PUC/PSC or Federal Communications Commission.

RETURN TO AGENDA

1.13. "State" means the State of Illinois.

1.14. "Utility Infrastructure" means existing poles and/or conduits owned or controlled by public or private utility companies, other than CITY-owned utility companies that are located in the ROW.

2. Grant of Access and Occupancy Rights

2.1 Attachment to Third-Party Property. Subject to obtaining an existing utility easement or other suitable form of written permission of the owner(s) of the affected property, CITY hereby authorizes and permits ExteNet to enter upon the ROW and to attach, install, operate, maintain, remove, reattach, reinstall, relocate, and replace Equipment in or on Utility Infrastructure or other structures lawfully owned and operated by public utility companies or other property owners and located within or outside the Rights-of-Way. Upon request by CITY , ExteNet shall furnish to the City documentation in a form reasonably acceptable to the City of such permission from the individual utility or property owner. City shall provide a response to ExteNet within thirty days of submission of a completed application to access the ROW. A denial of an application for the Attachment of Equipment to Utility Infrastructure or other third-party poles or structures shall not be based upon the size, quantity, shape, color, weight, configuration, or other physical properties if ExteNet's Equipment proposed for use conforms to one of the pre-approved configurations and the Equipment specifications set forth in Exhibit A or is not materially different is size, shape and color of telecommunications or electrical equipment then existing in the ROW. The reason for any denial shall be provided in writing with the denial.

2.2 Approval of Equipment Design, Configurations and Attachments. ExteNet will submit to CITY an application with a proposed design for any Equipment that ExteNet proposes to use in CITY Rights-of-Way. Such application shall include a map or annotated aerial photograph identifying which Utility infrastructure or Facilities ExteNet seeks to use for Attachments. Once the City verifies that the Equipment proposed in the design complies with the pre-approved configurations and the Equipment specifications set forth in Exhibit A, the City will approve the particular Utility Infrastructure and Facilities to which ExteNet can attach its Equipment.

2.2.1 Change in Equipment. If ExteNet proposes an Attachment or installation of Equipment that differs in a material way from the pre-approved configurations and Equipment specifications attached hereto as Exhibit A, then ExteNet shall first obtain the written approval for the use and installation of the Equipment from an authorized representative of CITY.

2.3 Equipment Attachment to Facilities. CITY hereby grants to ExteNet the nonexclusive right, privilege, and license to enter and occupy CITY 's Rights-of-Way. Such right to enter and occupy shall be for purposes of, and/or in connection with, Attachments of Equipment, and shall be subject to applicable rules, regulations or statutes setting forth non-discriminatory and reasonable controls as to the time, place and manner in which CITY 's Rights-of-Way are accessed and occupied in order to protect the health, safety and welfare of the public.

2.4 Pole Placements. In the event that an ExteNet application for Attachment is deemed impractical or denied by CITY due to lack of existing Facilities, the parties agree that either ExteNet shall be granted the right for Pole Placement in the Rights-of-Way or CITY shall place a Facility for Attachment of ExteNet's Equipment. City shall provide a response to ExteNet within thirty days of submission of a completed application. The reason for any denial shall be provided in writing with the denial. A denial of an application for Pole Placement shall not be based upon the size, quantity, shape, color, weight, configuration, or other physical properties of ExteNet's Equipment if the Equipment proposed conforms to one of the pre-approved configurations and specifications set forth in Exhibit A.

2.4.1 If the parties agree that Pole Placement is to be effected by ExteNet, ExteNet shall bear the entire cost and expense of all placement, installation, construction, and maintenance for Pole Placement.

2.5 Structural Integrity of Facility. If ExteNet selects a Facility that is structurally inadequate to accommodate Equipment, ExteNet may at its sole cost and expense replace the Facility with one that is acceptable to and approved by the City and dedicate such Facility to the CITY.

2.6 Assignment of Cost. Except as otherwise provided in this Agreement, ExteNet shall bear the entire cost and expense of all placement, installation, construction, maintenance, and operation of Equipment and/or Attachments and Pole Placements by ExteNet in the Rights-of-Way, and shall hold CITY harmless from any such costs or expense.

2.7 Power for Equipment and Facilities. ExteNet will be solely responsible for establishing electrical power services for all of its Equipment and for the payment of all electrical utility charges to the applicable utility company. Notwithstanding this provision, CITY and ExteNet may mutually agree that ExteNet may power its Equipment Attachments to Facilities from a power source available at or associated with the relevant CITY Facilities.

2.8 Additional Future Attachments. ExteNet may apply to CITY to expand its initial Network installation through the same process as specified in this Section 2.

3. Term

Unless otherwise agreed, the term of this Agreement shall commence on the Effective Date and continue thereafter for an initial period of ten (10) years (the "Initial Term"). ExteNet shall have the right to extend this Agreement for up to two renewal terms of five (5) years. The Agreement shall renew unless ExteNet gives CITY written notice of its election not to renew this Agreement not less than 90 days prior to the expiration of the Initial Term or a Renewal Term.

4. Fees

4.1. ROW Fees. ExteNet shall pay ROW Fees to cover CITY's reasonable cost of administering ExteNet's access to and occupancy of CITY's ROW for new Pole Placement and for installation of ExteNet Equipment within, over or under CITY's ROW, including Attachments to facilities owned by third parties. Such ROW Fees shall be computed on the basis of the rates set forth in Exhibit B attached and shall be based only on the number of Node Poles and/or the linear feet of ROW in use by ExteNet within the geographic boundaries of CITY during the relevant period. Subject to Section 5.3, ExteNet may remove any Equipment or Attachments in the ROW at any time and the corresponding ROW Fees shall cease upon removal.

4.2. Attachment Fees. ExteNet shall pay Attachment Fees to CITY for each CITY-owned or leased Facility to which ExteNet makes an Attachment. Such Attachment Fees shall be computed on the basis of the rates set forth in Exhibit B attached. Notwithstanding the foregoing, ExteNet shall not be liable for payment of any Attachment Fee if for any reason CITY's Facility is or subsequently becomes unusable for Attachments, or ExteNet withdraws its application for Attachment to such Facility before completing such Attachment or putting the Equipment into productive service. Subject to Section 5.3, ExteNet may remove any Attachment at any time and the corresponding Attachment Fees shall cease upon removal.

4.3. Other Fees and Compensation. The foregoing Fees are in addition to and not in lieu of any other non-discriminatory administrative fees and charges, imposed by CITY in connection with the issuance of construction permits, provision of copies of records, etc.

4.4. Payment Terms. All Fees payable pursuant to this Section 4 shall be paid by ExteNet within thirty (30) days of receipt of an invoice from the CITY for the applicable Fee(s).

4.5. Changes to Laws and Regulations Affecting Fee Rates. ExteNet and CITY

acknowledge and agree that, in order to expedite the development and construction of ExteNet's Network for the benefit of residents and visitors in CITY, the rates set forth in Exhibit B have been negotiated by the parties without complete information concerning their reasonableness relative to the costs to be incurred by CITY or the rates being charged to others for similar access, use and attachments in the same or contiguous market areas, and without regulatory review. Therefore, during the term of this Agreement if: (a) lower rates are established or charged to ExteNet's competitors or other telecommunications providers as a result of any ordinance or regulation subsequently adopted by CITY or by the State or any federal agency having jurisdiction over such determinations; or (b) a court or regulatory agency makes a final, non-appealable determination that any of the rates set forth in Exhibit B, or any rates for similar access or use of the ROW or attachments to facilities in the same or contiguous market areas that are equal to or lower than the rate in Exhibit B, are not reasonable or legal, then the parties shall negotiate in good faith to reduce the rates set forth in Exhibit B accordingly. Further (y) if by the State or any federal agency having jurisdiction over such determinations; or (z) if a court or regulatory agency makes a final, non-appealable determination that the terms and conditions of access to the ROW or rights of attachment to facilities is materially different from or in addition to the rights set forth herein, the Parties will negotiate in good faith to amend the Agreement to reflect such determinations.

5. Construction

5.1. CITY Approval. Prior to commencing construction, ExteNet shall identify to [Insert name of City agency] those portions of CITY's Rights-of-Way that ExteNet needs to access and/or occupy, and CITY's Facilities, if any, upon which ExteNet seeks to make Attachments. Further, ExteNet shall provide a map or annotated aerial photograph identifying which Facilities ExteNet seeks to use for Attachments. Once the City verifies that the Equipment proposed in the design complies with the pre-approved configurations and the Equipment specifications set forth in Exhibit A, the City will identify those Facilities to which ExteNet can attach its Equipment. CITY shall have thirty (30) days to review and approve ExteNet's construction plans, which approval shall not be unreasonably withheld, conditioned or delayed. CITY shall notify ExteNet in writing of its approval or disapproval of ExteNet's proposed construction plans and Attachments. In the event that CITY personnel fail to deliver to ExteNet written notice of approval or disapproval of such plans and Attachments within thirty (30) days, such plans and Attachments shall be deemed approved by CITY .

5.2 Avoidance of Interference. ExteNet agrees that the placement, installation, construction, maintenance, operation and removal of Equipment installed in CITY Rights-of-Way and its Attachments to CITY Facilities or Utility Infrastructure shall be carried out in such locations and in such manner so as not to unreasonably interfere with water, gas, sewer pipe, traffic signal, street light and other utilities and

conduits already existing.

5.3. Permits. ExteNet further agrees to obtain all necessary excavation or encroachment permits setting forth time, place and manner restrictions necessary to protect the health, safety and welfare of the public, prior to commencing construction required for Equipment Attachment or Pole Placement in CITY 's Rights of Way or Facilities. CITY agrees to cooperate in expediting the issuance of such permits as reasonably requested by ExteNet in order to meet the reasonable requirements of ExteNet's customers and the telecommunications services needs of end users served by them.

5.4. Street Furniture Cabinets. If a portion of ExteNet's Equipment, not including antennas, cannot be accommodated on CITY's Facilities, the parties agree that ExteNet may place such equipment in above-ground street furniture and equipment cabinets located in the Rights-of-Way. In no instance shall the installation of any of ExteNet's Equipment in street furniture or equipment cabinets block pedestrian walkways in the ROW or result in violation of the Americans with Disabilities Act. If ExteNet cannot obtain necessary permits, approvals or other authorizations to place street furniture or equipment cabinets in the Rights-of-Way, parties agree that ExteNet may place Equipment in below-ground vaults, and that CITY shall authorize such vaults expeditiously pursuant to applicable City Code zoning and undergrounding provisions. In such instance, ExteNet will be responsible for all costs associated with such below-ground vaults, including without limitation relocation costs of any public improvements or public utilities facilities.

5.5. Compliance with Law. When placing, installing, constructing, maintaining, operating, removing or relocating Equipment or Pole Placement in CITY Rights-of-Way, or making Attachments to CITY Facilities, ExteNet shall comply with all applicable federal and State statutes, regulations and orders, including but not limited to the [state Commission or legislative construction standards], National Electric Code (NEC) and/or National Electric Safety Code (NESC)]. ExteNet shall also comply with all CITY technical specifications and requirements that are reasonable and non-discriminatory with respect to their impact on telecommunications services and ExteNet as a provider thereof, and all applicable national, State and local building, electrical and safety codes.

5.6. Restoration. If the placement, installation, construction, maintenance, operation, removal or relocation of Equipment or poles by ExteNet disturbs or alters CITY Rights-of-Way or Facilities, ExteNet, at its own expense shall restore such CITY Rights-of-Way or CITY Facilities to their original condition, normal wear and tear excepted.

6. Maintenance

6.1. Proper Maintenance. ExteNet shall maintain its Equipment and poles located in CITY Rights-of-Way and its Attachments in such condition that they shall not

constitute a danger to the health, safety and welfare of the public.

6.2. Right of Entry. ExteNet may enter upon CITY Rights-of-Way and CITY Facilities to maintain or repair Equipment or poles from time to time without prior approval of CITY .

6.3. Removal or Replacement of Equipment. ExteNet may remove or replace any items of Equipment as reasonably required in connection with the ongoing provision of Services without prior approval of CITY, so long as any replacement Equipment is substantially the same as that which has been removed with regard to size, weight and physical configuration. Removal of Equipment from any Rights of Way or Attachment shall not constitute termination of this Agreement.

6.4. Permits. In the event maintenance or repair activities will disturb or block pedestrian or vehicular traffic in CITY Rights-of-Way, ExteNet shall obtain all permits required by CITY prior to commencing such maintenance or repair.

7. Relocation of Equipment

7.1. Notice. CITY may request relocation of ExteNet's Equipment by delivering written notice to ExteNet identifying the need for such relocation and alternative CITY Rights-of-Way and/or CITY Facilities to which ExteNet may relocate its Equipment.

7.2. Timeframe. After receiving notice, ExteNet shall relocate its Equipment to alternative CITY Rights-of-Way and CITY Facilities identified by CITY as soon as practicable, but in no event sooner than ninety (90) days after receipt of such notice. ExteNet and CITY may mutually agree to relocation of Equipment in less than (90) days to respond to emergencies or other similar extraordinary circumstances.

7.3. Cost of Relocation. In the event relocation of Equipment is necessitated by construction, repair, maintenance, relocation or elimination of any CITY Rights-of-Way or CITY and CITY fails or refuses to provide ExteNet access to and use of reasonably comparable alternative locations in the ROW or alternative Facilities for such relocation, the cost and expense of such relocation shall be borne by CITY (or such other party as CITY may designate), and ExteNet shall not be required to relocate such Equipment until adequate assurance of payment or reimbursement is delivered to ExteNet or suitable alternative ROW access or Facilities are identified, engineered and approved by CITY to support said relocation activities. Similarly, in the event relocation of Equipment is necessitated by the needs of another party (other than CITY), the cost and expense of such relocation shall be borne by such other party, and ExteNet shall not be required to relocate such Equipment until adequate assurance of payment or reimbursement is delivered to ExteNet by such other party. Notwithstanding any other provision hereof, in the event that CITY or the State enacts an ordinance, law or regulation requiring that all aerial (e.g., pole-mounted) wires and cables in some or all of the geographic area of

the CITY be relocated to underground installations in the ROW, ExteNet shall be permitted to participate in any joint build program for underground installation of telecommunications and other compatible utility wirelines and cables and to pay only its reasonably determined proportional share of the cost of all such relocations covered by the joint build program. In all other events, the cost and expense of relocation of Equipment shall be borne by ExteNet.

7.4. Exclusions. ExteNet shall not be required to relocate any poles ExteNet has placed in CITY Rights-of-Way excepting only such actions initiated as a result of an approved acquisition by CITY or other such entity exercising their rights under imminent domain.

7.5. Relocations at ExteNet's Request. In the event ExteNet desires to relocate any Equipment from one Facility to another, ExteNet shall so advise City. City will use reasonable efforts to accommodate ExteNet by making another reasonably equivalent Facility available for use in accordance with and subject to the terms and conditions of this Agreement.

8. Indemnification

8.1. Scope of Indemnification for CITY. ExteNet shall indemnify and hold harmless CITY, its elected and appointed officers, its council members, boards, commissions, employees, and agents from any and all injury, claim, demand, judgment, liability, or damage arising out of or resulting from ExteNet's negligence in the placement, installation, construction, maintenance, operation and removal of Equipment in CITY 's Rights-of-Way or on CITY Facilities or otherwise in the performance of this Agreement. ExteNet shall not be obligated to hold harmless or indemnify CITY for any injury, claims, demands, judgments, liabilities or damage to the extent that they are due solely to the gross negligence or intentional and/or willful acts of CITY , or any of its officers, council members, boards, commissions, employees, or agents.

8.2. Scope of Indemnification for ExteNet. CITY shall indemnify and hold harmless ExteNet and its officers, directors, shareholders, employees, and agents from any and all injury, claim, demand, judgment, liability, or damage arising out of or resulting from any negligence by CITY or its officers, boards, commissions, employees, or agents in connection with this Agreement. CITY shall not be obligated to hold harmless or indemnify ExteNet for any injury, claims, demands, judgments, liabilities or damage to the extent that they are due solely to the gross negligence or intentional and/or willful acts of ExteNet.

8.3. Excluded Damages. In no event shall either party be liable for any punitive, consequential, incidental, or special damages or lost profits incurred, or alleged to have been incurred, by anyone.

8.4. Notice. Any party seeking indemnification hereunder ("Indemnitee") shall

notify the other party ("Indemnitor") within fifteen (15) days of the nature and amount of a claim arising under this Section, and the method and means proposed by the Indemnitee for defending or satisfying such claim.

8.5. Representation. The Indemnitor shall pay for all costs and expenses, including reasonable legal fees, of defense for Indemnitee in any claims or actions subject to indemnification hereunder, provided that so long as the Indemnitor has undertaken and is vigorously pursuing such defense it shall not be responsible for additional legal fees and expenses incurred by the Indemnitor. The Indemnitee shall cooperate and consult with the Indemnitor respecting the defense and satisfaction of such claims, including the selection of and direction to legal counsel, and the Indemnitee shall not pay or settle any such claim without the prior written consent of the Indemnitor, which consent shall not be unreasonably withheld. The Indemnitee will be allowed, at its own expense, to appear and defend or assist Indemnitor in the defense of such claims.

8.6. Breach of Agreement. In the event that any claim, complaint or litigation is brought by either party to this Agreement against the other for breach of this Agreement, or for an interpretation of this Agreement, each party shall bear its own costs, including legal fees and expenses.

9. Insurance

9.1. General Liability Insurance. ExteNet shall maintain and keep in effect during the Term of this Agreement, commercial general liability insurance with a combined single limit with respect to each occurrence of not less than $1,000,000, insuring ExteNet (and naming CITY as an additional insured) against loss, damage, cost, expense or liability for any damage to any property or injury, illness or death of any person occurring or arising as a result of the negligence of ExteNet in connection with the placement, installation, construction, maintenance, operation and removal of Equipment in CITY 's Rights-of-Way or in connection with any Attachment on CITY Facilities.

9.2. Other Insurance. ExteNet shall maintain and keep in effect during the Term of this Agreement, worker's compensation insurance as required by law.

9.3. Proof of Insurance. ExteNet shall provide insurance certificates or other reasonable evidence of all insurance coverage required under this Agreement to CITY upon request.

10. Security

Not less than ten (10) business days prior to the first Attachment of ExteNet Equipment to CITY Facilities or the first installation of ExteNet Equipment within, over or under the CITY's ROW, ExteNet shall provide CITY with security for the proper removal of such Equipment and restoration of such Facilities or ROW in the form of a bond in the amount

of $13,500.00 as set forth on Exhibit C. The Bond shall conform substantially to Exhibit C attached to this Agreement or otherwise be reasonably acceptable to CITY, and such Bond or a substantially equivalent replacement shall be maintained in effect throughout the term of this Agreement, subject only to adjustments to the amount to reflect changes in the number of Attachments or in the portion of CITY's ROW occupied by ExteNet.

11. Assignment

11.1. Assignment without approval. ExteNet shall have the right to assign this Agreement and all rights and obligations accorded ExteNet to a wholly-owned subsidiary or a parent entity of ExteNet without the prior written consent of CITY. In the event ExteNet assigns this Agreement to a subsidiary or parent, entity, ExteNet shall provide CITY with prior written notice of such assignment.

11.2. Assignment requiring approval. ExteNet must obtain the prior written consent of CITY in order to assign this Agreement, or any right or obligation under this Agreement, to a third party other than a wholly-owned subsidiary or parent entity of ExteNet. Such consent shall not be unreasonably withheld, conditioned or delayed by CITY.

12. Termination

12.1. Termination by ExteNet. ExteNet may terminate this Agreement, at its election and without cause, by providing written notice of termination to CITY at least ninety (90) days prior to the effective date of such termination.

12.2. Termination by either party. Either CITY or ExteNet may terminate this Agreement for an uncured material breach by the other party. The party asserting a breach must first provide written notice of the existence of a material breach to the breaching party. Such notice shall state the grounds for termination in reasonable detail. The party receiving notice of termination for cause shall have thirty (30) days to cure, or commence and vigorously pursue good faith efforts to cure the alleged material breach if such breach cannot reasonably be cured within 30 days. A notice of termination for cause issued by CITY shall be issued only after the completion of a public proceeding, during which ExteNet shall have a full opportunity to be heard and to respond to any notice of grounds to terminate.

13. Notices

13.1. Service of Notice. All notices required or permitted to be given to either party by the other party under any provisions of this Agreement shall be in writing. Notice shall be deemed served when delivered by hand or by a private delivery service to the other party's address set forth below during normal business hours. If a Notice is mailed, service is deemed complete upon the earlier of actual delivery or the close of business on the third business day following the date when the Notice is placed in a receptacle regularly maintained

by the U.S. Postal Service addressed to the party at the address set forth below with postage pre-paid.

13.2. Notice shall be given to the following:

CITY of Fairview Heights, IL.:
Name: Gail D. Mitchell
Title: Mayor
Address: 10025 Bunkum Rd.
Fairview Heights, IL 62208

ExteNet:

Title: Chief Financial Officer
Address: 3030 Warrenville Rd., Ste 340
Lisle, IL 60532

With a copy to "General Counsel" at the same address.

14. Validity and Construction of Agreement

14.1. Counterpart Execution. This Agreement may be executed in any number of counterparts, each of which when executed and delivered shall be deemed an original, all of which together shall constitute the same instrument. Execution and delivery may be accomplished by facsimile or other electronic means.

14.2. Severability. If one or more of the provisions in this Agreement are held by an agency or court of competent jurisdiction, in a final, non-appealable order, to be invalid, void, voidable, unenforceable or illegal, such provision shall be deemed severable from the remaining provisions of this Agreement. Such invalid, void, voidable, unenforceable or illegal provision shall not affect the remaining provisions of this Agreement so long as the material purposes of this Agreement can be determined and effected.

14.3. Entire Agreement. This Agreement states the entire agreement between the parties and supersedes all prior agreements and understandings, whether oral or written, between the parties with respect to the subject matter hereof, and may not be amended or modified except by a written instrument executed by the parties hereto. This Agreement contains the entire understanding of the parties with respect to the subject matter hereof. No waiver of any right or remedy hereunder shall be effective unless and until set forth in a writing delivered to the other party, and a waiver, forbearance or other failure to enforce any right or remedy on any given occasion or under any specified circumstance shall not be construed as, or have the effect of, a waiver of such rights or remedies on any other occasion or under any other circumstances.

14.4. Amendment. This Agreement may be amended only by the Parties hereto by an entrustment in writing signed by or on behalf of each of the parties hereto.

14.5. Governing Law. This Agreement shall be governed by and construed in accordance with the laws of the State, without reference to its conflicts of laws principles.

15. Force Majeure.

No failure by a party to perform its obligations in accordance with this Agreement shall be deemed a material breach or grounds for termination if such failure to perform occurred as a result of circumstances beyond such party's reasonable control as described below. Further, the time for performance of any duties or obligation of CITY or ExteNet shall be extended for the period during which performance was delayed or impeded due to causes beyond such party's control, including but not limited to strikes, lockouts, labor disputes, supply shortages, utility outages, cable dig-up by third party, civil disorders, actions of governmental authorities, actions of civil or military authority, national emergency, insurrection, riots, war, acts of terrorism, acts of God, fire, floods, epidemics, freight embargoes or other causes beyond the reasonable control of the party required to perform an act, the party shall be excused from performing that act for a period equal to the period of the preventing circumstance or delay. If ExteNet or CITY claims the existence of a circumstance preventing performance, the party claiming the delay shall notify the other party in writing of that fact within ten (10) days after the beginning of any such circumstance. Economic hardship, misfeasance, or malfeasance of a party's directors, officers, employees, council, officials or agents shall not be considered as a condition beyond the fault or control of the defaulting party.

16. Confidentiality

Non-public information provided by either party to this Agreement, including network deployment plans and technical and operational details, shall to the extent allowed by law be kept confidential and used only for purposes related to the performance of this Agreement. Both CITY and ExteNet shall take reasonable steps to protect confidential information obtained from the other in connection with performance of this Agreement from public disclosure or unauthorized use.

IN WITNESS THEREOF, the parties hereby bind themselves legally to the terms and conditions set forth in this Agreement, as evidenced by the signature of their duly authorized representatives.

RETURN TO AGENDA

CITY of Fairview Heights, IL	ExteNet Systems, Inc.
By: _____	By: _____
Title: _____	Title: _____
Date: _____	Date: _____

RETURN TO AGENDA

Exhibit A

ExteNet Equipment Specifications

The Parties will agree upon the ExteNet Equipment Specifications and pre-approved equipment designs within thirty days of the Effective Date.

RETURN TO AGENDA

Exhibit B

ROW and Attachment Fees

TELECOMMUNICATIONS ATTACHMENT & RIGHT OF WAY ACCESS	
Deployment Option	**ROW Fees**
ExteNet Attachment of Equipment to Third-Party Owned Pole (e.g. Utility Infrastructure) in ROW	$1,000.00 per Node Pole, one-time fee
ExteNet Attachment of Fiber to Third-Party Owned Pole or Placement of Fiber in Third-Party Owned Conduit in ROW	$0.50 per linear foot of ROW occupied, one-time fee
ExteNet Pole Placement in ROW (subject to credit set forth in Section 2.5)	$1,000.00 per Pole Placed, one-time fee
ExteNet Placement of Fiber in ExteNet Owned Conduit in ROW	$0.50 per linear foot of ROW occupied, one-time fee
Deployment Option	**Attachment Fees**
ExteNet Attachment of Equipment to City Owned Facility	$1,000.00 per Pole, one-time fee
ExteNet Placement of Fiber in City Owned Conduit	$0.50 per linear foot of conduit occupied, one-time fee

The foregoing fees shall not be combined.

RETURN TO AGENDA

Exhibit C

Form of Security for Removal & Restoration

"EXHIBIT B"

RETURN TO AGENDA

DRAFT PROPOSED DARK FIBER LICENSE AGREEMENT

This Dark Fiber License Agreement ("Agreement") is entered into this ___ day of _____, 201_ by and between ExteNet Systems, Inc., ("ExteNet"), and the **City of Fairview Heights, Illinois** ("Licensee"). ExteNet and Licensee are sometimes referred to herein individually as a "Party" or collectively as the "Parties."

Background

WHEREAS, this Agreement is made in light of the following premises and circumstances, all of which are a part of this Agreement:

A. ExteNet, a Delaware corporation holding a Certificate of Service Authority issued by the Missouri Public Service Commission, will be the owner of certain fiber optic cables comprising a component of a small cell, distributed antenna system or other similar telecommunications facilities ("DAS") network that ExteNet plans to install in, over and/or under the public rights of way ("ROW") within the geographic boundaries of Licensee for the provision of providing telecommunications service (the "Network");

B. Licensee is a political subdivision of the State of Missouri with jurisdiction over the ROW for certain purposes and is the owner of certain conduits located within the ROW along the Planned Fiber Route;

C. The planned route of such fiber optic cable is depicted on the Fiber Route Map attached hereto as Exhibit 1;

D. Licensee is entitled to manage the public ROW and to require fair and reasonable compensation based on principles of cost recovery as a condition to allowing ExteNet access to the ROW;

E. ExteNet and Licensee desire to enter into an agreement to govern the terms and conditions under which ExteNet will reserve **two (2)** Dark Fiber strands in ExteNet's fiber optic cable for the exclusive use of Licensee as required by Licensee in connection with implementation of the Network installation in the ROW.

RETURN TO AGENDA

Agreement Terms and Conditions

NOW THEREFORE, in consideration of the promises and mutual covenants contained herein, the ExteNet and Licensee, for valuable consideration, hereby agree as follows:

1. Definitions

For the purpose of this Agreement, the following terms when used herein shall have the following meanings:

(i) "Access Point" means a Manhole, Vault, Handhole, Junction Box or Pedestal through which the ExteNet Cable may be accessed for the purposes of splicing fibers to interconnect to other networks or facilities.

(ii) "Authorized Contractors" means third party contractors (whether independent or affiliated with ExteNet) that have been approved and authorized by ExteNet to utilize Access Points and to make splices or perform other work on the ExteNet Cable as provided for in this Agreement.

(iii) "Dark Fiber" means an unlit optical fiber strand in a Fiber Segment that is separate from and has not yet been connected to any of the equipment, electronics, lasers or additional Fiber Segments necessary to transmit optical signals via the fiber strand or to corresponding fiber strands in other adjacent Fiber Segments.

(iv) "ExteNet Cable" means the several Fiber Segments, whether aerial or undergrounded, comprising the optical fiber components of the Network as deployed and depicted in the Fiber Route Map as the Fiber Route Map may be changed by Licensee from time to time.

(v) "Fiber Route Map" means the map of the composite routes of the various Fiber Segments comprising the fiber cabling to be installed as part of the Network, as depicted on the map attached as Exhibit 1 as the same may be modified during or after construction of the Network. Exhibit 1 shall be replaced with the "As-Built" Fiber Route Map following completion of the Network and thereafter shall be updated from time to time as necessary to reflect modifications to the Fiber Segments or additional Fiber Segments comprising the ExteNet Cable made in accordance with the provisions of this Agreement.

(vi) "Fiber Segment" means a continuous run of multi-strand fiber optic cable covering a portion of the fiber cable route shown on the Fiber Route Map.

(vii) "Handhole" means a buried box, with a lid that is even with the surface of the ground, used to store, terminate, splice or transfer fiber optic cable.

(viii) "Junction Box" means a box where fiber optic cable splices and connections are made and accessed.

(ix) "Licensed Fiber" means the **two (2)** individual strands of Dark Fiber within each Fiber Segment of the ExteNet Cable, as the same may be modified in accordance with this Agreement that shall be reserved and/or designated for exclusive use by Licensee in accordance with and subject to the terms of this Agreement. For clarity, ExteNet shall not be obligated to provide Licensed Fiber to Licensee for portions of the ExteNet Cable that ExteNet acquires from a third-party under commercial or wholesale terms (e.g. leased fiber, licensed fiber, IRU fiber, etc.) and/or otherwise does not construct and own. [For avoidance of doubt, additional Fiber Segments that are connected to the Network following its initial construction and deployment in accordance with the Fiber Route Map set forth in Exhibit 1 on the effective date of this Agreement shall be deemed a part of the ExteNet Cable and shall be subject to the foregoing obligations on the part of ExteNet to reserve and/or designate **two (2)** strands of Dark Fiber for exclusive use by Licensee only if and to the extent that such Fiber Segments and any associated Equipment are located within the geographic boundaries of Licensee and are made subject to the ROW Agreement on terms and conditions no less favorable to ExteNet than those that are then in effect with respect to the Network as initially constructed and deployed.]

(x) "Manhole" means a subsurface enclosure which qualified personnel may enter and use for the purpose of installing, operating and maintaining facilities.

(xi) "Pedestal" means an above ground structure used to store, terminate, splice or transfer fiber optic cable.

(xiii) "Vault" means an underground structure used to store, terminate, splice or transfer fiber optic cable.

2. License

2.1 License Grant

Subject to the terms, conditions and limitations set forth herein, ExteNet hereby grants to Licensee a license and right for the exclusive use of the Licensed Fiber for the transmission of optical signals generated by optical or other equipment owned or employed by Licensee. The duration of the foregoing license shall continue in perpetuity so long as the ExteNet Cable installation remains in place and is in use by ExteNet and its successors in interest and assigns, but nothing herein shall obligate ExteNet to continue to maintain and operate the ExteNet Cable or any portion thereof or to maintain any attachment rights related thereto during any periods in which ExteNet is not otherwise using or planning to use the ExteNet Cable (other than the Licensed Fiber) for the provision of services to ExteNet's customers. The foregoing license and right is granted as compensation to Licensee in lieu of any taxes that might otherwise be assessed on any property in the ROW based upon ExteNet's installation of its facilities. ExteNet or its

successors in interest shall give Licensee prior written notice and a reasonable opportunity to assume responsibility for maintaining and operating each Fiber Segment containing Licensed Fiber before removing such Fiber Segment or ceasing to use such Fiber Segment for the provision of services. Except where ExteNet is otherwise legally obligated to remove a Fiber Segment in a shorter period of time, such prior notice shall be given at least ninety (90) days in advance of such removal. Notwithstanding the foregoing, in the event that (i) ExteNet or its successor in interest proposes to cease using a Fiber Segment (other than the Licensed Fiber) for the provision of services to customers and (ii) such Fiber Segment contains Licensed Fiber that is in use by Licensee, Licensee shall have the option, in order to avoid removal of such Fiber Segment, of assuming responsibility for the operation and maintenance of such Fiber Segment.

2.2 Scope of Grant

(i) ExteNet shall provide Licensee with access to the Licensed Fiber. To the extent that ExteNet has authority to use and authorize third party use of Access Points, it will grant permission to Authorized Contractors to use such Access Points for splicing the Licensed Fiber for the purpose of interconnection to other compatible equipment or facilities as directed by Licensee and at Licensee's sole cost. ExteNet shall have no obligation whatsoever to install any additional fiber optic cable or to allocate any additional strands of the ExteNet Cable to meet the needs of Licensee.

(ii) Licensee shall undertake to obtain and provide all approvals, authorizations, coordination and supervision that is necessary in connection with its use of the Licensed Fiber. Without limiting the foregoing, Licensee shall have the sole responsibility for performing all activities and paying all costs necessary to make the Licensed Fiber operational, including but not limited to: (i) splicing the Licensed Fiber to achieve interconnection between or within the applicable Fiber Segments and between the Licensed Fiber and fiber optic cable belonging to others, and (ii) providing, attaching and interconnecting equipment, electronics and lasers as required to transmit or receive optical signals via the Licensed Fiber. Licensee shall further have the sole responsibility for paying all costs and for constructing or otherwise providing facilities needed to connect the Licensed Fiber to any other network or facilities via appropriate Access Points, and for performing all necessary fiber splices for interconnection of the Licensed Fiber to other network facilities. Except as otherwise approved by ExteNet (such approval not to be unreasonably withheld) all such splices and other uses of Access Points shall be carried out only by Authorized Contractors and, to the extent practicable, only during regularly scheduled maintenance windows or at other times that are reasonably convenient for ExteNet.

(iii) ExteNet and Licensee agree and acknowledge that Licensee's use and operation of the Licensed Fiber does not and will not create or convey to Licensee any ownership or property rights of any nature in the Licensed Fiber or any portion of the ExteNet Cable or of any Access Points or of the Network. Licensee may not encumber, offer as collateral, or allow any third party claims of any type on or against the Licensed Fiber.

RETURN TO AGENDA

(iv) In the event that Licensee or any agency thereof fails or refuses to give any approval or issue any permit that is purportedly required for the construction and installation of the Network or otherwise takes action to prevent or prohibit construction or implementation of the Network substantially as proposed by ExteNet in the materials it has heretofore submitted to the City Public Works Department or other division with jurisdiction, then the license and right with respect to the Licensed Fiber as provided in this Agreement shall, without any action on the part of ExteNet other than the giving of written notice thereof, be entirely null and void and of no further force or effect.

2.3 Designation of Licensed Fiber Strand

(i) At any time following completion of the Network construction and installation, Licensee may notify ExteNet of its desire to access the Licensed Fiber reserved for its use by ExteNet. Such notice shall be written and shall be provided no fewer than sixty (60) days prior to the date on which Licensee desires to access the Licensed Fiber for purposes of interconnection. Licensee's notice shall identify all of the following: (1) Licensee's planned use for the Licensed Fiber, (2) the specific portions of the Licensed Fiber route (i.e., the Fiber Segments) in which Licensee intends to light and use Licensed Fiber, (3) the Access Points Licensee desires to use (if any) to access and splice the Licensed Fiber and (4) all personnel or contractors that Licensee proposes to use to perform any work activity involving the Licensed Fiber, including but not limited to construction and installation of fiber drops or laterals for interconnection of the Licensed Fiber to ancillary Access Points or to lasers, electronics or other equipment, facilities or networks for purposes of lighting and using the Licensed Fiber, and (5) Licensee's plans for interconnecting with and using the Licensed Fiber, including relevant technical and functional network specifications and design criteria for Licensee's systems that may facilitate consultation and cooperation of Licensee and ExteNet in the interest of efficient and effective implementation of Licensee's plans in accordance herewith.

(ii) Within ten (10) days following receipt of such initial notice, ExteNet shall provide Licensee with a color-coded diagram designating the specific optical fiber strands within the designated Fiber Segments that have been designated as the Licensed Fiber for all purposes hereunder.

(iii) ExteNet shall have the right to determine in advance whether Licensee's personnel and/or proposed contractors are qualified to perform such work activities and may disapprove any proposed personnel or contractor in its sole reasonable discretion. ExteNet shall identify the reasons for such disapproval in writing and Licensee may propose alternate personnel or contractors.

(iv) Licensee is solely responsible for obtaining all public, private or government approvals, authorizations, permits, certifications, easements, rights of way and attachment rights beyond those required for installation and maintenance of the ExteNet Cable, if any, that are necessary in order for Licensee to light and transmit or receive signals using the Licensed Fiber, and shall provide documentary evidence thereof as and when reasonably requested by ExteNet.

(v) At Licensee's request or in the event that ExteNet refuses to approve Licensee's selected contractor as an Authorized Contractor, ExteNet will either propose or exert commercially reasonable efforts to cause one of its Authorized Contractors to propose to perform the work necessary for Licensee's proposed interconnection of equipment and other network facilities with the Licensed Fiber on a time and materials basis at then prevailing commercially reasonable rates for work of substantially similar complexity and difficulty in the relevant market.

2.4 Limitations and Requirements for Use of Licensed Fiber Strand

(i) ExteNet and Licensee agree and acknowledge that Licensee may use the Licensed Fiber in the ExteNet Cable for any lawful purpose for which the fiber strand is technically suited, provided that Licensee shall use the Licensed Fiber solely for public purposes, shall not use it for the provision of any telecommunications services in competition with the business of ExteNet or for the benefit of any competitor of ExteNet, and shall not permit any third party to use or operate the Licensed Fiber except at the direction of Licensee in furtherance of public purposes.

(ii) If ExteNet determines for any reason that it is necessary to relocate, modify, underground or otherwise alter ("Relocation or Modification") all or any portion of the ExteNet Cable, including the Licensed Fiber (whether such Licensed Fiber is then lit and/or in use by Licensee), ExteNet shall provide Licensee written notification prior to making the proposed relocation, modification or alteration. Such notice shall be given at least sixty (60) days in advance except in circumstances in which ExteNet is legally obligated to take action more promptly and the prior notification requirement of this section shall not apply to emergency situations, in which case ExteNet will give notice as quickly as is reasonably practicable. Licensee shall have no responsibility for costs and expenses relating to any such Relocation or Modification of the ExteNet Cable. But if and to the extent that such Relocation or Modification is required by reason of events or circumstances beyond ExteNet's reasonable control, Licensee shall have sole responsibility for costs and expenses relating to any necessary rearrangement, relocation, modification or alteration of any of Licensee's fiber drops or laterals or other equipment, electronics or lasers installed to light the Licensed Fiber, or other facilities Licensee has interconnected to the Licensed Fiber ("Licensee Facilities Relocation or Modification") that may result therefrom. However, if and to the extent that such Relocation or Modification is made at ExteNet's discretion or for ExteNet' benefit, ExteNet shall bear the reasonable cost of the Licensee Facilities Relocation or Modification resulting therefrom.

(iii) Any equipment, electronics, lasers, or interconnecting fiber or other network facilities provided by Licensee shall be installed and maintained in accordance with the requirements and specifications of the then current editions of the National Electrical Code (NEC), and the National Electrical Safety Code (NESC), each of which are incorporated by reference in this Agreement. Further, Licensee and its consultants and contractors shall at all times comply with the applicable rules and regulations of the Occupational Safety and Health Act of 1970 (OSHA), with all applicable state and federal statutes and laws, and with all applicable regulations, rules

RETURN TO AGENDA

and orders issued by any state or federal agency having jurisdiction thereof, including without limitation the Federal Communications Commission and the Missouri Public Service Commission.

(iv) ExteNet reserves the right to make periodic inspections at any time of any part of Licensee's equipment, electronics, lasers, or facilities (including interconnected fiber or copper cable) utilized by Licensee in conjunction with the Licensed Fiber for purposes of assuring compliance with the terms and conditions hereof and with applicable laws, rules and regulations as reasonably necessary to prevent or detect interference with or damage to the Network or breaches of Licensee's obligations hereunder. Except in the case of an emergency, ExteNet shall give Licensee 48 hours notice before carrying out such inspections and Licensee shall be permitted, but not required, to have a representative present for such inspections. Such inspections shall be conducted at ExteNet's expense unless ExteNet determines that Licensee is not in compliance with the terms of this Agreement. In such instance, Licensee shall be responsible for paying ExteNet for all reasonable costs incurred by ExteNet in making the inspection. Licensee agrees that such periodic inspections by ExteNet, or the failure to do so, shall not relieve Licensee of any responsibility, obligation or liability whether assumed under this Agreement or otherwise existing.

3. Maintenance

(i) ExteNet shall maintain all facilities interconnected with or comprising a part of the ExteNet Cable that are owned by ExteNet, including the Licensed Fiber, provided that ExteNet's obligation to maintain such facilities shall not in any way extend beyond the term of any other agreement with the Licensee for ROW use or equipment attachments to Licensee's facilities and provided further that such obligation shall cease earlier as to any Fiber Segment with respect to which ExteNet and its successors in interests either: (1) loses the necessary attachment and access rights to enable such maintenance; or (2) permanently ceases to use such Fiber Segment (other than the Licensed Fiber) for the provision of services to their customers, provided that before removing any such Fiber Segment ExteNet gives Licensee prior written notice and an opportunity to assume responsibility for maintaining and operating such Fiber Segment as provided in Section 2.1.

(ii) Licensee shall have sole responsibility for maintaining all of its equipment, electronics, lasers, fiber and other facilities interconnected to the Licensed Fiber. Licensee shall maintain its equipment, electronics, lasers and interconnecting fibers and facilities in good repair and in a manner that will not interfere with, or degrade the quality or reach of any signal, transmission or telecommunications carried on the ExteNet Cable. If Licensee's equipment or facilities should cause any type of interference with, or degradation of, any signal, transmission or telecommunications on the ExteNet Cable, Licensee agrees to correct the condition. Such correction shall be made within three (3) hours for any problem causing interference or disruption of any signal, transmission or telecommunications on the ExteNet Cable. Such correction shall be made within six (6) hours for any problem causing a degradation, but not

RETURN TO AGENDA

disruption, of any signal, transmission or telecommunications on the ExteNet Cable. If Licensee fails to take such corrective action, ExteNet may in its sole discretion correct said condition at Licensee's expense. ExteNet shall notify Licensee in writing prior to performing such work whenever practicable. When ExteNet reasonably believes, however, that such conditions pose an immediate threat to public safety or interfere with the performance of ExteNet's service obligations to its customers, or pose an immediate threat to the physical integrity of the ExteNet Cable or other facilities, ExteNet may perform such work and/or take such action, including temporary disconnection of Licensee's equipment and facilities from the ExteNet Cable, that it reasonably deems necessary without first giving written notice to Licensee. Licensee shall be responsible for paying ExteNet for all reasonable costs incurred by ExteNet in taking such corrective actions if ExteNet shows that the problem was in fact caused by Licensee's equipment or facilities. In the latter case, ExteNet shall bear the cost of any reconnection or restoration of Licensee's equipment or facilities that is made necessary as a result of ExteNet's mistaken actions. ExteNet shall be indemnified by Licensee for such work in accordance with Section4 below.

~~**4. Liability and Damages**~~

~~(i) Only as arising under this Agreement and not in its capacity as a municipality or otherwise, Licensee, its personnel, agents and contractors shall exercise reasonable caution to avoid damaging the facilities of ExteNet and shall make an immediate report to ExteNet of the occurrence of any such damage caused by its personnel, agents or contractors. Licensee agrees to reimburse ExteNet for all reasonable costs incurred by ExteNet for repair of such facilities damaged by Licensee, its personnel, agents and contractors.~~

~~(ii) Only as arising under this Agreement and not in its capacity as a municipality or otherwise, Licensee shall be liable to ExteNet for all of its actions or omissions that cause damage to the ExteNet Cable, the Access Points and all other facilities and equipment associated with the Network, or that interfere with, disrupt or degrade the quality or reach of any signal, transmission or telecommunications carried on the ExteNet Cable or the Network, but shall not be liable for any special, indirect, or consequential damages arising from Licensee's actions or omissions.~~

~~(iii) ExteNet shall not be liable to Licensee for any special, indirect, or consequential damages arising from any interruption or degradation of Licensee's communications carried on Licensed Fiber.~~

5. Mutual Indemnification

(i) Each of ExteNet and Licensee (as "Indemnifying Party") hereby agrees to indemnify, defend and hold harmless the other (as "Indemnitee") from and against any third party demand, claim, action, suit or proceeding ("Claim") and any resulting loss, liability, cost, expense or fine, including court and appeal costs and reasonable attorneys' fees and expenses ("Losses"), that are caused by or arise out of the actual or alleged acts or

omissions, whether negligent or willful, of the Indemnifying Party, its personnel, agents or contractors, in connection with the performance under this Agreement or otherwise in connection with the construction (including any excavation), installation, operation, maintenance or use of the Extenet Cable or the Licensed Fiber or any equipment or facilities interconnected or associated therewith.

(ii) Notwithstanding the foregoing, each party's respective obligations as an Indemnifying Party under paragraph (i) above shall not include any liability or obligation to defend:

(a) to the extent that Losses arise out of or are caused by the Indemnitee's intentional misconduct and/or gross negligence;
(b) to the extent that the defense of any Claim is prejudiced, or the resulting Losses are caused by the Indemnitee's failure or refusal to provide the Indemnifying Party with timely notice of the Claim, or to cooperate in the defense thereof, or are caused by the Indemnitee entering into a settlement or compromise of the Claim without the prior written approval of the Indemnifying Party; or
(c) to the extent that Losses result from the Indemnitee's failure or refusal to take commercially reasonable actions as the Indemnifying Party may request, and at the Indemnifying Party's sole cost and expense, in order to mitigate or lessen such Losses.

(iii) The Indemnitee shall give the Indemnifying Party timely written notice of any Claim covered by this Section 5. The Indemnitee shall tender the defense of the Claim to the Indemnifying Party and such defense shall be carried out under the control and at the expense of, the Indemnifying Party. The Indemnitee may participate in the defense of a Claim at any time, provided that, during all periods in which such defense has been assumed and is being carried out by the Indemnifying Party with qualified counsel, the incremental costs of the Indemnitee's participation shall be at its own expense. The Indemnifying Party may not agree to any settlement of Claims affecting the Indemnitee's operations or finances without the Indemnitee's prior written approval, provided that if such approval is unreasonably withheld or delayed, then the Indemnifying Party's obligations under this Section 5 shall be limited to the Losses that would have been incurred if such settlement had been approved.

(iv) Notwithstanding anything herein to the contrary, Licensee shall also indemnify ExteNet against any third party claims or charges comprising pass-throughs of property taxes imposed upon structures located in the ROW by reason of ExteNet's attachments of facilities to such structures or improvements made to such structures in order to accommodate such attachments.

6. Insurance

(i) Without limiting any obligations or liabilities of Licensee under this Agreement, prior to

interconnecting with the Licensed Fiber, Licensee shall maintain for the duration of such interconnection, at its own expense, Commercial General Liability Insurance including Contractual Liability Coverage, covering liability assumed under this Agreement, Products/Completed Operations Coverage, Broad Form Property Liability Coverage, and Personal Injury Coverage in the amount of $1,000,000 combined single limit for Bodily Injury and Property Damage and a $1,000,000 occurrence aggregate.

(ii) Licensee's insurance policies required by this Agreement shall name ExteNet as an additional insured.

(iii) Licensee shall provide ExteNet with Certificates of Insurance evidencing coverage currently in effect prior to commencing to place equipment, electronics or lasers to light the Licensed Fiber. All policies are to provide ExteNet with thirty (30) days prior written notice of cancellation or any material adverse change in conditions.

7. Assignment

(i) Licensee may not assign, sub-license, or transfer in any manner, in whole or in part, its rights, duties or obligations under this Agreement.

(ii) Neither this Agreement nor any term or provision hereof, nor any inclusion by reference shall be construed as being for the benefit of any person or entity not a signatory hereto.

8. Termination

The Parties shall have the right to terminate this Agreement and the license granted herein under the following circumstances:

(i) ExteNet. ExteNet may terminate this Agreement (a) upon thirty (30) days written notice with an opportunity to cure within ten (10) days therefrom in the event that Licensee commits a material breach of this Agreement, becomes subject to any bankruptcy or insolvency proceeding under Federal or state statute or becomes insolvent or becomes subject to direct control by a trustee, receiver or similar authority, or uses the Licensed Fiber for any unlawful purpose, or (b) upon sixty (60) days written notice in the event that ExteNet for any reason ceases to have rights to operate and maintain the ExteNet Cable or any significant portion thereof, or (c) immediately upon written notice pursuant to Section 2.2(iv).

(ii) Licensee. Upon sixty (60) days written notice, Licensee may terminate this Agreement, for any reason or for no reason (i.e., for convenience).

(iii) In the event of termination in accordance herewith for any reason, Licensee shall remove all equipment, electronics, lasers and fiber or other facilities interconnected to the

RETURN TO AGENDA

ExteNet Cable within sixty (60) days after the effective date of the termination. All costs of any kind arising from removal of Licensee' equipment, lasers and fiber, or other facilities shall be borne entirely by Licensee.

9. General Provisions

9.1 Notices

(i) All notices required or permitted to be given to either party by the other party under any provisions of this Agreement shall be in writing. Notice shall be deemed served when delivered by hand or sent by a nationally recognized overnight courier service to the other party's address set forth below during normal business hours. If a Notice is mailed, service is deemed complete upon the earlier of actual delivery or the close of business on the third business day following the date when the Notice is placed in a receptacle regularly maintained by the U.S. Postal Service addressed to the party at the address set forth below with postage pre-paid.

(ii) Notices shall be given to the following:

City of Fairview Heights, Illinois:
Mayor Mark T. Kupsky
10025 Bunkum Road
Fairview Heights, Illinois 62208

ExteNet:
ExteNet Systems, Inc.
3030 Warrenville Rd, Ste 340
Lisle, IL 60532
Attn: CFO and
General Counsel at the same address.

Or to such other addresses and persons as Licensee or ExteNet may hereafter designate in a notice given in accordance with this Section 9.1.

9.2 Non-Waiver

Failure of ExteNet to take action to enforce compliance with any of the terms or conditions of this Agreement, or to give notice or declare this Agreement or any authorization granted

RETURN TO AGENDA

hereunder terminated, or to exercise any right or privilege hereunder, shall not be construed as a continuing or future waiver of such term, condition, right or privilege, but the same shall be and remain at all times in full force and effect.

9.3 Headings

All headings contained in this agreement are for convenience only and are not intended to affect the meaning or interpretation of any part of this Agreement.

9.4 Governing Law

This Agreement and the rights and obligations contained in it shall be construed in accordance with, and governed by, the laws of the State of Missouri without regard to its choice of law provisions.

9.5 Counterparts

This Agreement may be executed in any number of counterparts, each of which when executed shall be deemed an original, but all of which together shall constitute one and the same instrument.

9.6 Confidentiality

The parties acknowledge that ExteNet will disclose proprietary and confidential network and business information to Licensee in order to perform this Agreement. Licensee agrees to take all reasonable steps to protect such proprietary and confidential information from public disclosure, and to make available such information internally only to Licensee personnel with a need to know or to its legal counsel. Licensee shall not disclose the contents of this Agreement except as required by state law in response to a formal request pursuant to the applicable Freedom of Information Law. Licensee shall notify ExteNet within 48 hours of receiving a request under the applicable Freedom of Information Law for information about this Agreement.

9.7. Venue

Venue for any complaint, cause, case or action arising from or related to this Agreement shall be in a state or federal court of competent jurisdiction sitting in the State of Missouri.

[THIS SPACE INTENTIONALLY LEFT BLANK]

RETURN TO AGENDA

IN WITNESS WHEREOF, the Parties hereto have executed this Agreement as of the date first written above.

CITY of Fairview Heights, Illinois (Licensee)	**ExteNet Systems, Inc. (ExteNet)**
By: _____	By: _____ Daniel L. Timm, CFO
Name: _____	
Title: _____	
Date: _____	Date: _____

RETURN TO AGENDA

Exhibit 1
Fiber Route Map dated _____